Clenergy
Innovating renewable energy

PV-ezRack® ezShade™

Code-Compliant Planning and Installation V2.2
Complying with AS/NZS1170.2:2011 AMDT 2-2012

Introduction

1. Introduction

Clenergy PV-ezRack®ezShade™ is a pre-assembled ground mount system suitable for large scale commercial and utility scale installations. PV-ezRack®ezShade™ has been developed to fit any PV module. The innovative and patented T-Rails simplify and improve the accuracy of the installation. Using high quality engineered components PV-ezRack®ezShade™ saves developers and installers, time and money when delivering large scale projects.

Please review this manual thoroughly before installing your PV-ezRack®ezShade™system. This manual provides
1) Simple introduction of the installation relating to PV-ezRack®ezShade™ Mounting systems.
2) Planning and installation instructions for PV-ezRack®ezShade™.

PV-ezRack®ezShade™parts, when installed in accordance with this guide, will be structurally sound and meet the AS/ NZS 1170.2:2011 (R2016) standards. During installation and especially when working on the roof, please comply with the appropriate safety regulations, and please also comply with the relevant regulations of your local region.

List of Contents

Introduction	01
Planning	02
Tools &Components	07
System Overview	09
Installation Instruction	12
Warranty	29
Certification Letter with Concrete Footing Options for ezShade	30

Please check that you are using the current version of the Installation Manual by contacting Clenergy Australia by email on tech@ clenergy.com.au, or your local representative.

The installer is solely responsible for:

- Complying with all applicable local or national building codes, including any that may supersede this manual;
- Ensuring that PV-ezRack and other products are appropriate for the particular installation and the installation environment;
- Using only PV-ezRack parts and installer supplied parts as specified by PV-ezRack (substitution of parts may void the warranty and invalidate the letter of certification on page 2);
- Recycling: Recycle according to the local relative statute.
- Removal: Reverse installation process.
- Ensure that there are no less than two professionals working on panel installation.
- Ensure the installation of all electrical equipment is performed by licensed electricians.
- Ensuring safe installation of all electrical aspects of the PV array. This includes providing adequate earth bonding of the PV array and PV-ezRack®ezShade™ components as required in AS/NZS 5033-2014 AMDT 2 2-20 .

1/10 Duerdin Street, Clayton VIC 3168 Australia
Tel: +61 3 9239 8088 Fax: +61 3 9239 8024
E-mail: sales@clenergy.com.au www.clenergy.com.au

2. Planning

- Side View

Below are the side view drawings of support for 60 cell panels (up to 1700 x 1050 mm) and 72 cell panels (up to 2108 x 1050 mm) at 5° tilt angle.

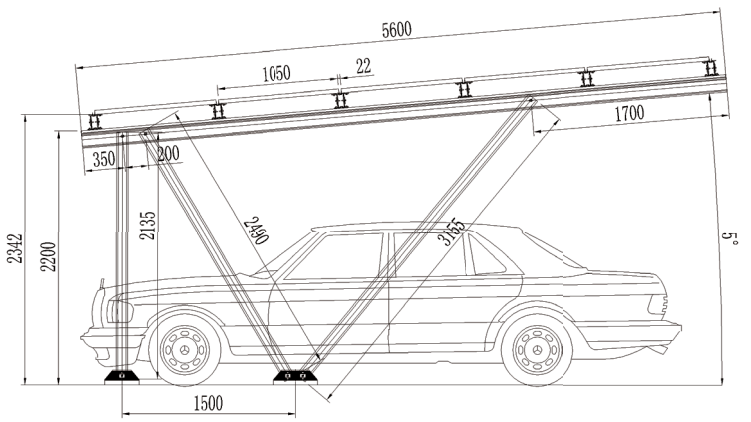

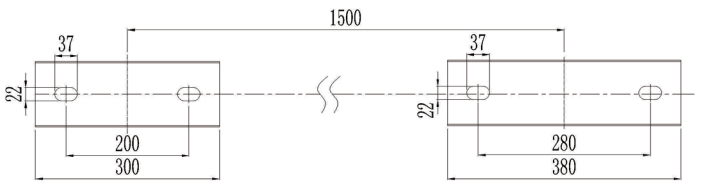

Location Plan of Anchors

1/10 Duerdin Street, Clayton VIC 3168 Australia
Tel: +61 3 9239 8088 Fax: +61 3 9239 8024
E-mail: sales@clenergy.com.au www.clenergy.com.au

- Front View

Below are the front view drawings of support for 60 cell panels (up to 1700 x 1050 mm) and 72 cell panels (up to 2108 x 1050 mm)

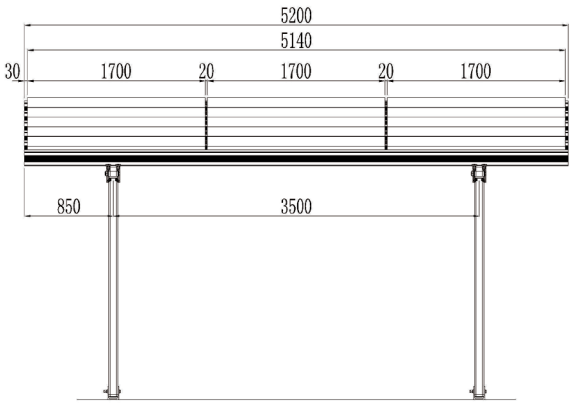

Front view drawings of single bay for 60 cell panels (up to 1700x1050 mm)

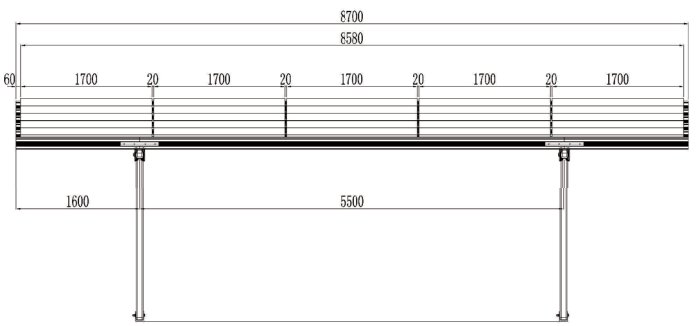

Front view drawings of double bay for 60 cell panels (up to 1700x1050 mm)

1/10 Duerdin Street, Clayton VIC 3168 Australia
Tel: +61 3 9239 8088 Fax: +61 3 9239 8024
E-mail: sales@clenergy.com.au www.clenergy.com.au

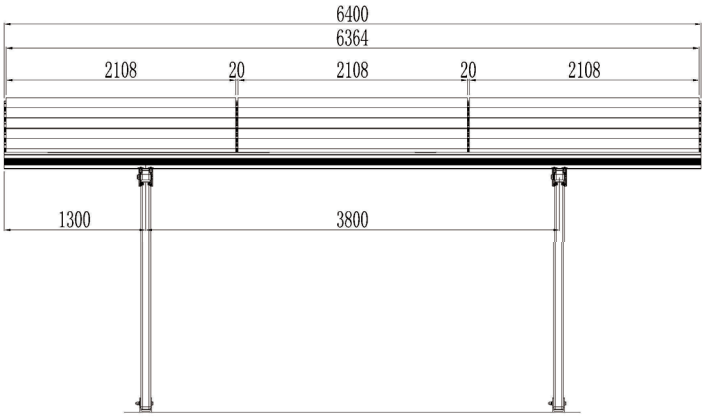

Front view drawings of single bay for 72 cell panels (up to 2108x1050 mm)

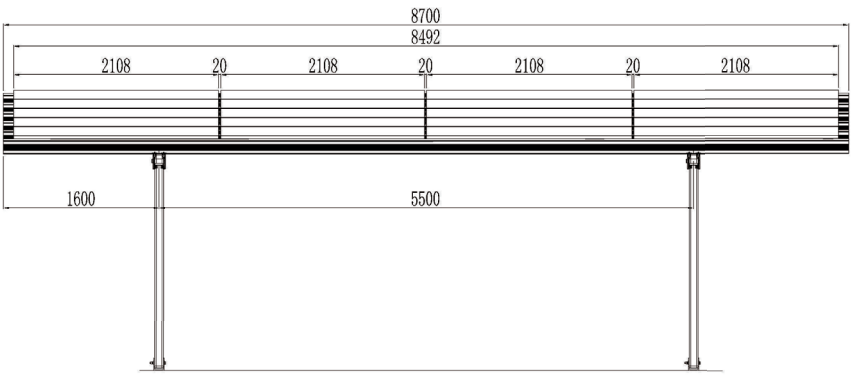

Front view drawings of double bay for 72 cell panels (up to 2108x1050 mm)

NOTE: 20 mm gaps between panels are for dry bars. If not using dry bars, it is not necessary to leave 20 mm gaps. .

1/10 Duerdin Street, Clayton VIC 3168 Australia
Tel: +61 3 9239 8088 Fax: +61 3 9239 8024
E-mail: sales@clenergy.com.au www.clenergy.com.au

Cutting the Dry-bars

This part is only relevant if using the ezShade watertight kits.

Clenergy ezShade Watertight Kit is designed based on the dimension of 1700 x1050 mm for 60 cell panels and 2108 x 1050 mm for 72 cell panels. The top range dimension is to make the watertight kit more universal for different panels. For the panels having smaller length or width, three components need to be cut to be suitable for the panel dimensions.

1. Dry Bar-Portrait (ER-B-P)

The length of Dry Bar-Portrait in Watertight Kit is 5405mm. The required length is calculated as,
n*W + (n-1)*22 + 67 (mm);
in which,
n is the number of rows of panels;
W is the panel width;

In case of 5 rows (standard configuration), the required length of Dry Bar-Portrait is 5*W+155 (mm).

For example, the length of Dry Bar-Portrait is 5*992 + 155 =5115 mm for 992mm wide panel with the length of 290 mm cut.

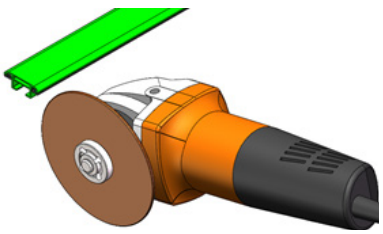

Note: please cut the Dry Bar-Portrait and its attached rubber together, and make sure the cut is straight.

2. Dry Bar – Landscape (ER-B-L)

The length of Dry Bar – landscape in Watertight Kit is 1687mm for 60 cell panel kit and 2095 mm for 72 cell panel kit. The required length is calculated as,

L-13 (mm); L is the panel length;

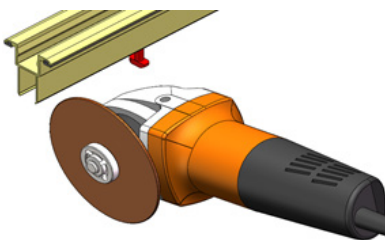

Using 1650 mm long panels as an example, the length of Dry Bar – landscape is 1650-13=1637 mm with the length of 50 mm cut. It is recommended to cut at both ends of dry bar to keep T bolts symmetrical distribution on the bar.

When the PV panel is between 1700 and 1800 mm long, it needs to use 72 cell panel kit with 2095 mm long dry bar – landscape. The dry bar needs to be cut at one end only and one of T bolts will be cut off with dry bar. The remaining 4 x T bolts still can maintain sound watertight function.

Note: please cut the Dry Bar – landscape and its attached rubber and make sure the cut is straight.

1/10 Duerdin Street, Clayton VIC 3168 Australia
Tel: +61 3 9239 8088 Fax: +61 3 9239 8024
E-mail: sales@clenergy.com.au www.clenergy.com.au

3. Top Cover for Landscape Dry Bar (ER-CAP-B/L)

The length of Top Cover for Landscape Dry Bar in Watertight Kit is 1687mm for 60 cell panel kit and 2095 mm for 72 cell panel kit. The required length is calculated as,

L-13 (mm) L is the panel length;

Using 1960 mm long panels as an example, the length of Dry Bar – landscape is 1960-13 =1947 mm with the length of 148 mm cut.

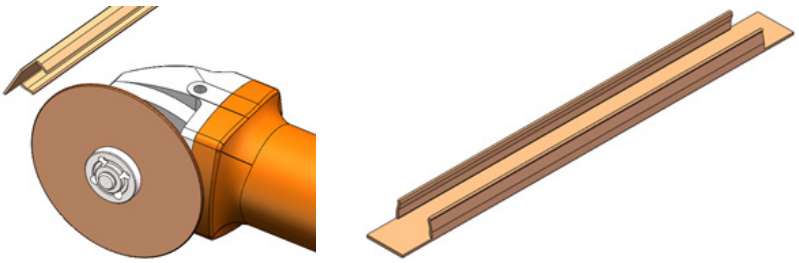

Note: Two wings of the Top Cover for Landscape Dry Bar need to cut 15 mm more at both ends (see the image below).

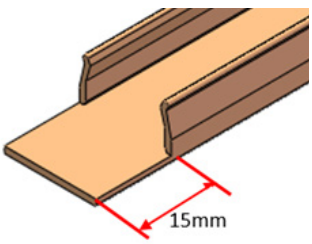

Concrete Footing Options

Please refer to the Certification Letter with Concrete Footing Options for ezShade. If a project specific Certification Letter has been provided, please refer to the footing info. in this letter.

1/10 Duerdin Street, Clayton VIC 3168 Australia
Tel: +61 3 9239 8088 Fax: +61 3 9239 8024
E-mail: sales@clenergy.com.au www.clenergy.com.au

3. Tools and Components
3.1 Installation Tools

Allen Key 6mm

(M8 Hexagon Socket Screw)

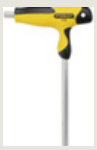

Electric Drill

(ST4.8x16 self-tapping screw & M8 Hexagon Socket Screw)

Tape

Torque Wrench

String

Mark Pen

Wrench

Socket Wrench M8/M12

Total Station or Equivalent Instrument

Rubber hammer

Scissor

Caulking Gun

1/10 Duerdin Street, Clayton VIC 3168 Australia
Tel: +61 3 9239 8088 Fax: +61 3 9239 8024
E-mail: sales@clenergy.com.au www.clenergy.com.au

3.2 Components

ER-R-T150
T-Rail 150

ER-SP-T150
Splice for T-150 Rail

ER-B-150
Main Support Beam

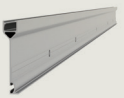

ER-SP-B150
Splice for Main Support Beam

ER-RC-T/G
Rail Clamp for T Rail with Grounding

RT-100/90
Rectangular Tube

U-AP/TR
Trapezoidal U-anchor Plate 300/380

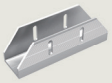

ER-MC-40
Module Clamp 40 mm

ER-B-L/A
Dry Bar-Landscape

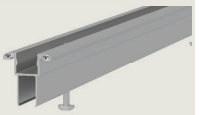

ER-B-L
Dry Bar-Landscape (with Bushing)

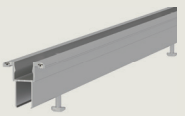

ER-CAP-B/L
Top Cover for Landscape Dry Bar

ER-CC-B/L
Cross Connection for Dry Bar-Landscape

ER-B-P
Dry Bar-Portrait

ER-B-T6/L
T bolt kit M6*L

ER-CAP-B/P
End Cap for Portrait Dry Bar

ER-CAP-B/L
End Cap for landscape Dry Bar

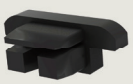

ER-CAP-T150/PA
Cap for T-150 Rail

ER-CAP-B150/PA
Cap for Composite Beam

1/10 Duerdin Street, Clayton VIC 3168 Australia
Tel: +61 3 9239 8088 Fax: +61 3 9239 8024
E-mail: sales@clenergy.com.au www.clenergy.com.au

4. System Overview

4.1 Overview of PV-ezRack ezShade

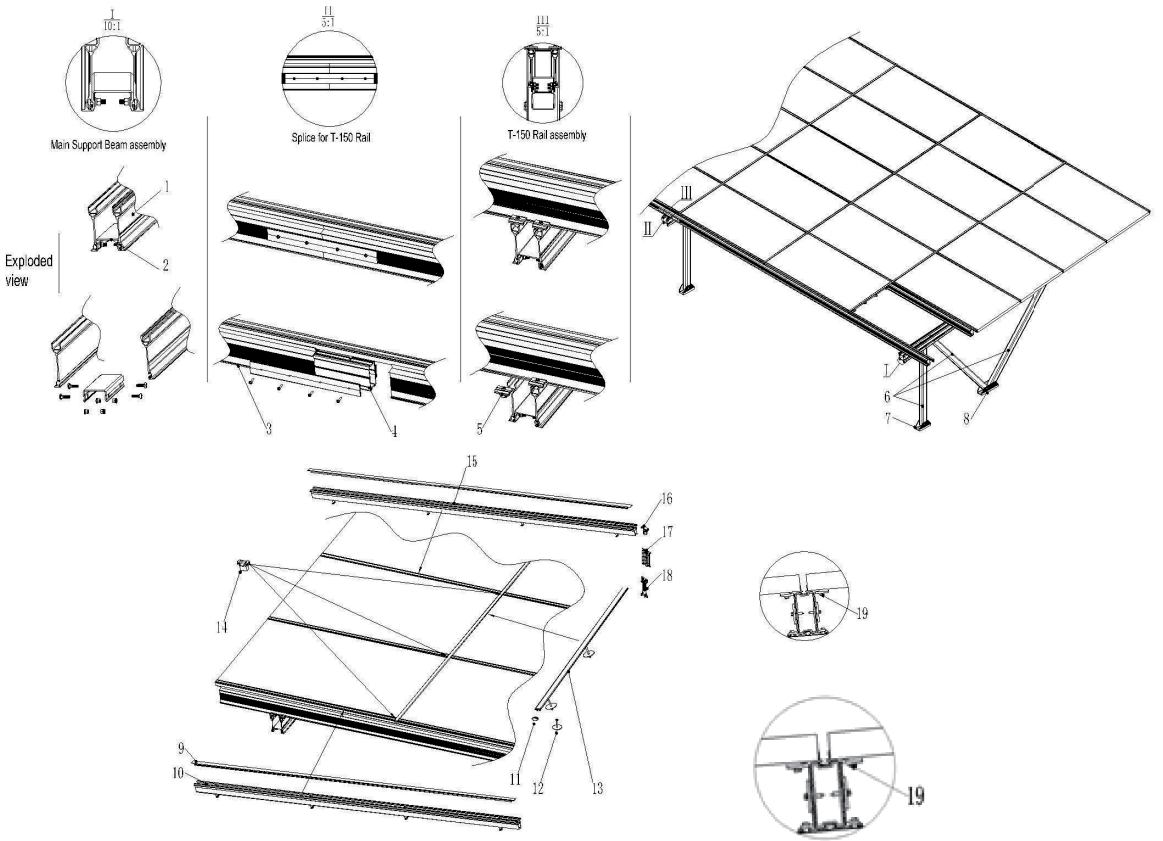

① Main Support Beam,150*L
② Splice for Main Support Beam
③ T-Rail 150*L
④ Splice for T-150 Rail
⑤ Rail Clamp for T Rail
⑥ Rectangular Tube 100*90*L
⑦ Corrugated U-anchor Plate 300
⑧ Corrugated U-anchor Plate 380
⑨ Top Cover for Landscape Dry Bar
⑩ Dry Bar-Landscape(with Bushing)

1/10 Duerdin Street, Clayton VIC 3168 Australia
Tel: +61 3 9239 8088 Fax: +61 3 9239 8024
E-mail: sales@clenergy.com.au www.clenergy.com.au

⑪ End Cap for Portrait Dry Bar
⑫ T-bolt kit M6*L
⑬ Dry Bar-Portrait
⑭ Cross Connection for Dry Bar
⑮ Dry Bar-Landscape
⑯ End Cap for Dry bar-landscape
⑰ Cap for T-150 Rail (PA6)
⑱ Cap for Composite Beam (PA6)
⑲ Module Clamp 40 mm (in use when Dry bars are not used)

4.2 Precautions during Stainless Steel Fastener Installation

Improper operation may lead to deadlock of Nuts and Bolts. Follow the steps below to reduce this risk.

4.2.1 Reduce the friction coefficient:
① Ensure that the thread surface is clean (no dirt or contaminants)
② Apply lubricant (grease or 40# engine oil) to fasteners prior to tightening to avoid galling or seizing in the threads;

4.2.2 General installation instructions:
① Apply force to fasteners in the direction of thread;
② Apply force uniformly, to maintain the required torque;
③ Professional tools and tool belts are recommended;
④ Avoid using electric tools for final tightening;
⑤ Avoid working at high temperatures;

4.2.3 Safe Torques
Please refer to safe torques as shown below. In case power tools are required, Clenergy recommends the use of low speed only. High speed and impact drivers increase the risk of bolt galling (deadlock). If deadlock occurs and you need to cut fasteners, please make sure that there is no load on the fastener before you cut it. Avoid damaging the anodized or galvanized surfaces.

1/10 Duerdin Street, Clayton VIC 3168 Australia
Tel: +61 3 9239 8088 Fax: +61 3 9239 8024
E-mail: sales@clenergy.com.au www.clenergy.com.au

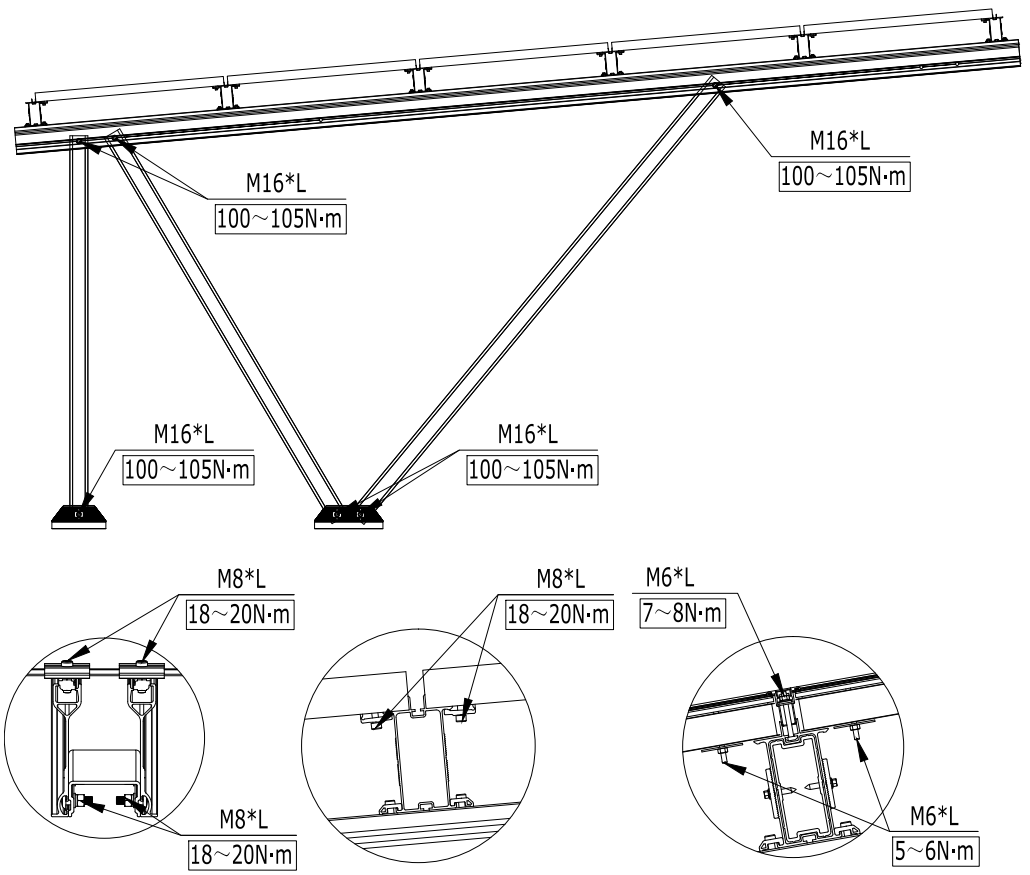

4.2.4 These steps should be applied for every stainless steel nut and bolt assembly.

4.3 Installation Dimensions

All drawings and dimensions in this installation guide are for a generic reference. PV-ezRack® ezShade™ is to be optimized to suit specific conditions for each project and documented in a construction drawing. As a result, major components of PV-ezRack® ezShade™ may be provided in section sizes and lengths that vary from those shown in this guide. The installation process detailed in this instruction guide remains the same regardless of the component size. In case you need to do any on-site modification or alteration of the system in a way that would be different from the construction drawing please provide marked up drawings/sketches for Clenergy's review prior to modification for comment and approval.

1/10 Duerdin Street, Clayton VIC 3168 Australia
Tel: +61 3 9239 8088 Fax: +61 3 9239 8024
E-mail: sales@clenergy.com.au www.clenergy.com.au

5. Installation Instruction

5.1 Post and Main Beam Installation

5.1.1 Embed 2 pcs of M20 bolt

Mark out the positions for bolts and embed 2 pcs of M20 bolt in each position as shown in Fig 1.

Make sure all M20 bolts are aligned in both horizontal and vertical direction as shown in Fig 2. Make sure all M20 bolts are aligned in both horizontal and vertical direction.

The distance between two bolts for Trapezoidal U-anchor Plate 300 and 380 is 200mm and 280mm respectively. All embedded bolts will be revealed 60mm~80mm above the ground as shown in Fig 1.

Note: The M20 bolts and matching nuts, washers and spring washers are provided by installer.

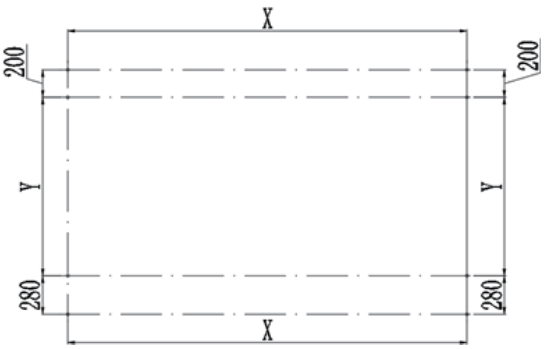

Fig. 1

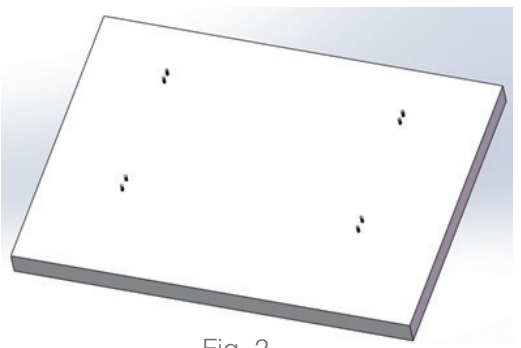

Fig. 2

5.1.2 Fix the Rectangular Tubes into the Trapezoidal U-anchor Plate

Place the Rectangular Tube into the Trapezoidal U-anchor Plate 300, align the holes and place bushing in one hand and put on M16 bolts in the other hand, then put on flat washers, spring washers, nuts and lock manually. Place the other two Rectangular Tube into the Trapezoidal U-anchor Plate 380 one by one, align the holes and place bushing in one hand and put on M16 bolts in the other hand, then put on flat washers, spring washers, nuts and lock manually as shown in Fig 3. Please refer to the engineering drawings for the size of the Rectangular Tube. Recommended Torque: M16: 100~105 N

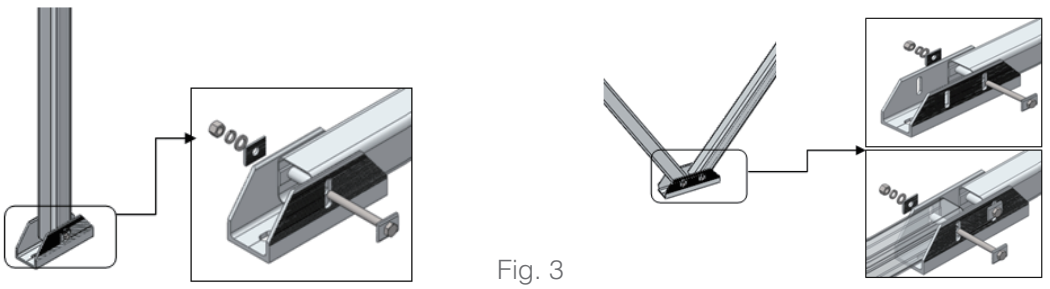

Fig. 3

1/10 Duerdin Street, Clayton VIC 3168 Australia
Tel: +61 3 9239 8088 Fax: +61 3 9239 8024
E-mail: sales@clenergy.com.au www.clenergy.com.au

5.1.3 Fix the Main Support Beam

Slide 6 sets of M8 Cup head square neck bolts along the half slot of each Main Support Beam. Fasten each Splice for Main Support Beam with two sets of M8 bolt assembly slightly by Socket Spanner 13mm. Take the other Main Support Beam and fix it with Splices by the above steps. Do not fasten the M8 bolts tightly before the end faces of Main Support Beams aligned as shown in Fig 4.

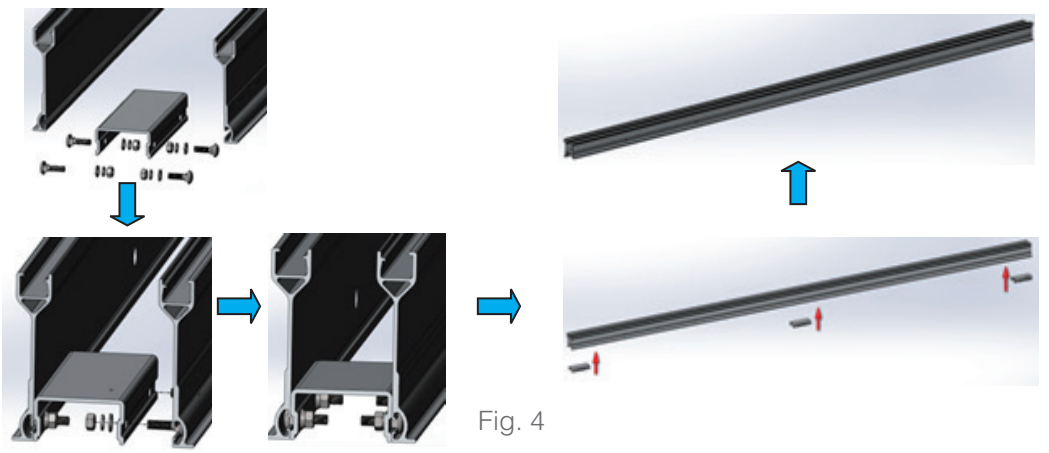

Fig. 4

5.1.4 Fix the assembled Main Beam into Rectangular Tube

Insert the assembled Main Beam into Rectangular Tube, align the holes and fasten with M16 Bolts assembly by Socket Spanner 24mm as shown in Fig 5. Double-check all bolts are fastened tightly.

Note: Laying down the Main Beam and Rectangular Tube on ground will be easier to assemble.
Please note that grease must be applied and tool speed must be controlled while fastening the bolts.

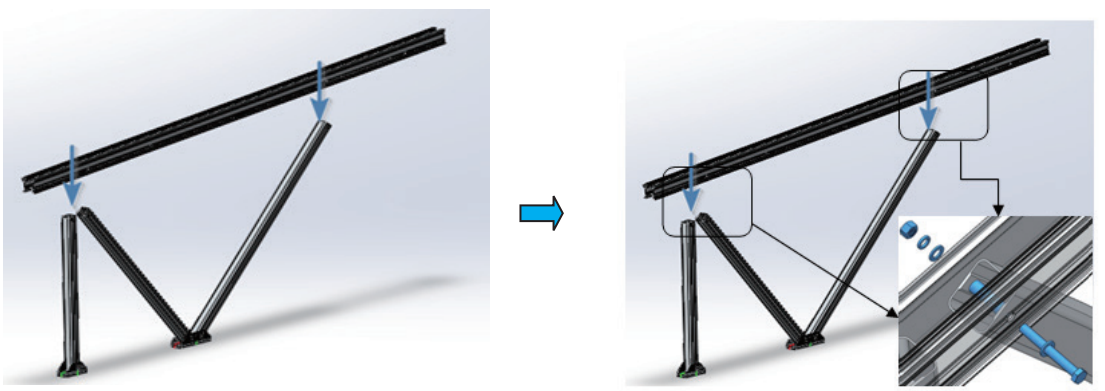

Recommended Torque:
M16: 100~105N·m

Fig. 5

1/10 Duerdin Street, Clayton VIC 3168 Australia
Tel: +61 3 9239 8088 Fax: +61 3 9239 8024
E-mail: sales@clenergy.com.au www.clenergy.com.au

5.1.5 Fix the assembled Main Beam & Rectangular Tube onto Ground/Concrete

Insert the assembled Rectangular Tubes with Main Beams into embedded bolts. Adjust the Trapezoidal U-anchor Plate to make the lower end faces of all Main Beams aligned in one array as shown in Fig 6, 7and 8. Now fasten the Trapezoidal U-anchor Plate with M20 Bolts assembly tightly.

Please note that grease must be applied and tool speed must be controlled while fastening the bolts.

Recommended Torque:
M20: 200~220 Nm

The up-down adjustable range of the Front/Rear leg is ±24mm.The north-south adjustable range of the Front/Rear leg is ±8mm.

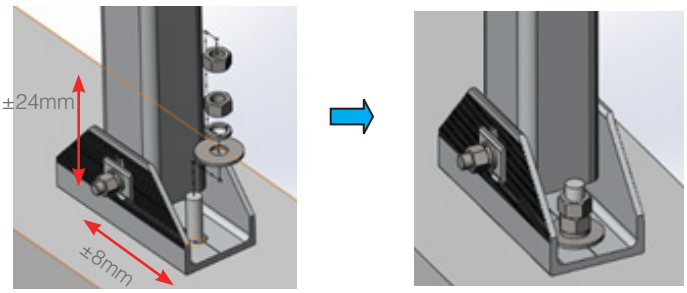

Fig. 6

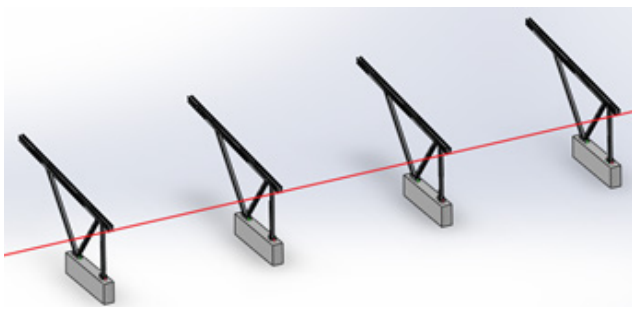

Fig. 7

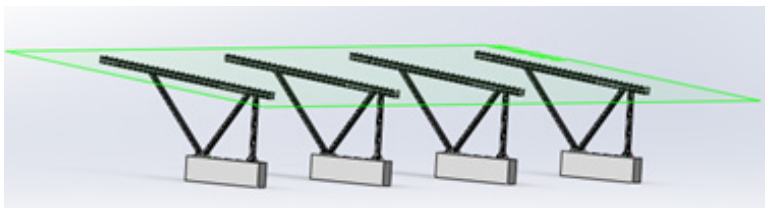

Fig. 8

1/10 Duerdin Street, Clayton VIC 3168 Australia
Tel: +61 3 9239 8088 Fax: +61 3 9239 8024
E-mail: sales@clenergy.com.au www.clenergy.com.au

5.2 Rail Installation

5.2.1 Fix the Rail splice into T Rail

In order to form a longer section, Splices may be used to join two T Rails. Insert Splice halfway into end of first T Rail, apply Corrugated Shim on outside and fasten using self-drilling screws. Slide second T Rail over splice, apply Corrugated Shim on outside and fasten using self-drilling screws as shown in Fig 9.
Note: Make sure the Corrugated Shim can match well with the corrugated face of T Rail.

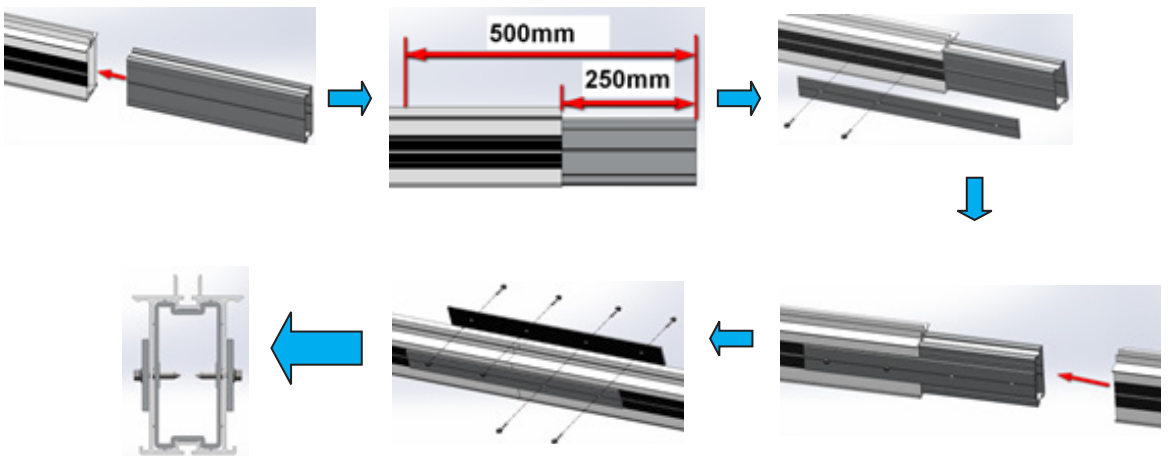

Fig. 9

5.2.2 Fix the T Rail onto Main Beam

Place the T Rail on the assembled Main Beam as shown in Fig 10. Apply Rail Clamp to fix the T Rail on the assembled Main Beam and fasten Rail Clamps by Allen Key 6mm as shown in Fig 11.

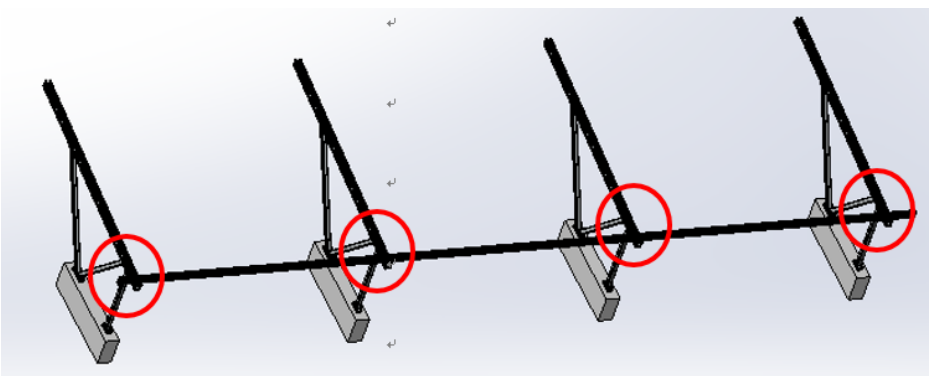

Fig. 10

1/10 Duerdin Street, Clayton VIC 3168 Australia
Tel: +61 3 9239 8088 Fax: +61 3 9239 8024
E-mail: sales@clenergy.com.au www.clenergy.com.au

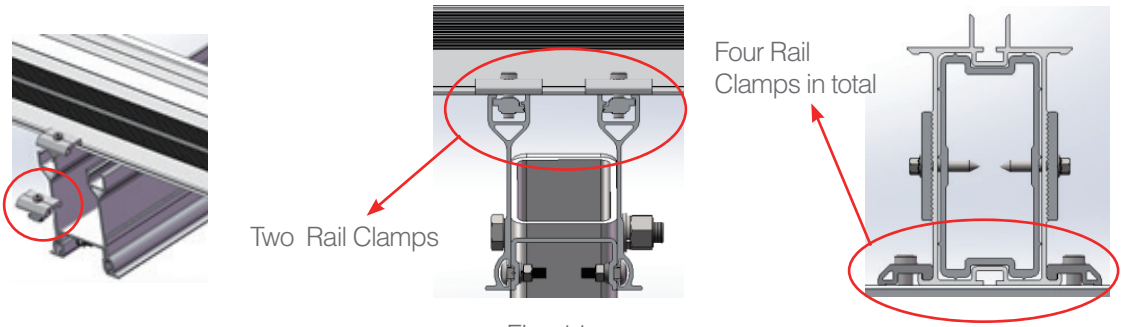

Fig. 11

Note: Apply two Rail Clamps for T-Rail on each side of Rail.
Control the tool speed.

Recommended Torque:
M8 Bolts: 18~20 N·m

According to engineering drawings, repeat the above operations to install other T-Rails as shown in Fig12. Ensure the end faces of the Rails are aligned, and all Rails are at same height. Now fasten all the bolts tightly.

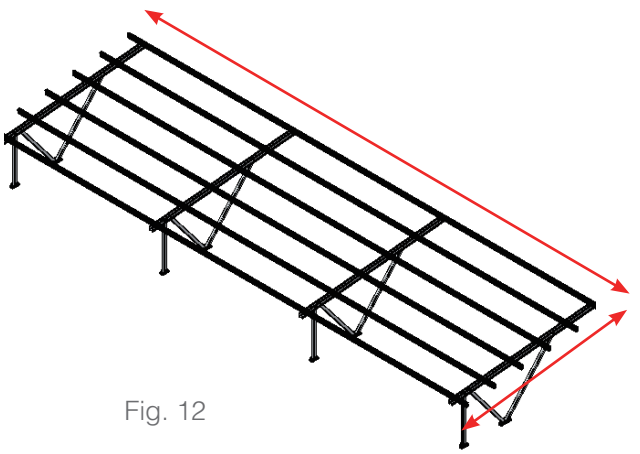

Fig. 12

Note: the installation positions of T-Rail as shown in Fig 13.

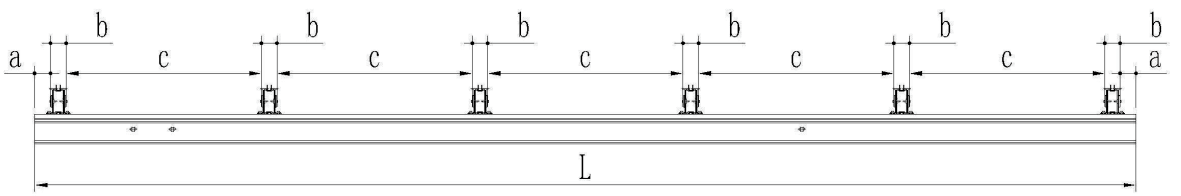

Fig. 13

1/10 Duerdin Street, Clayton VIC 3168 Australia
Tel: +61 3 9239 8088 Fax: +61 3 9239 8024
E-mail: sales@clenergy.com.au www.clenergy.com.au

5.2.3 PV Module Installation

Place the first row of PV Module on the T-rail as shown in Fig 14.

Make sure that the long side of the PV Module is parallel to the T-rail. Install the next module which aligns to the first one.

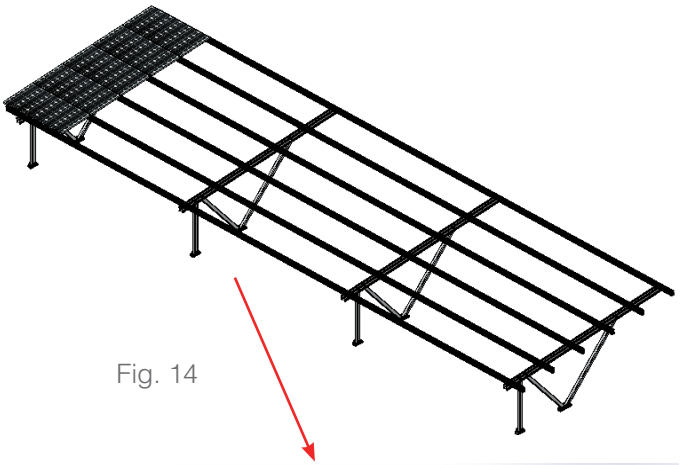

Fig. 14

Repeat this step until the last panel is finished and make sure the end face of PV modules are aligned as shown in Fig 15.

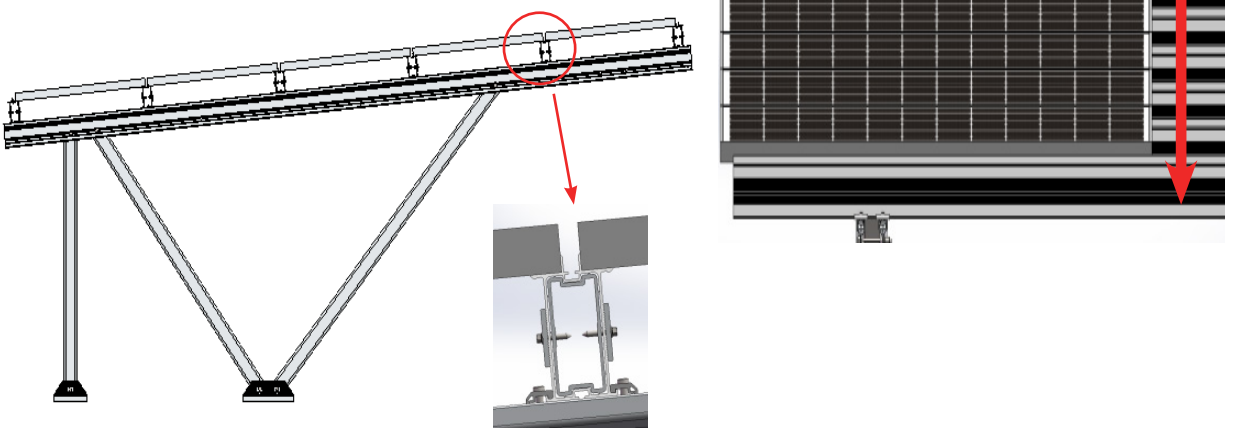

Fig. 15

1/10 Duerdin Street, Clayton VIC 3168 Australia
Tel: +61 3 9239 8088 Fax: +61 3 9239 8024
E-mail: sales@clenergy.com.au www.clenergy.com.au

5.2.4 Fix the Dry Bar-Landscape

After PV Module installation, place the Dry Bar-Landscape & Dry Bar-Landscape (with Bushing) into T-rail as shown in Fig16.

Note: Cut off the extra Rubber for Dry Bar by scissor.
The Dry Bar-Landscape with Bushing should be placed on the first and last row as shown in Fig 16.

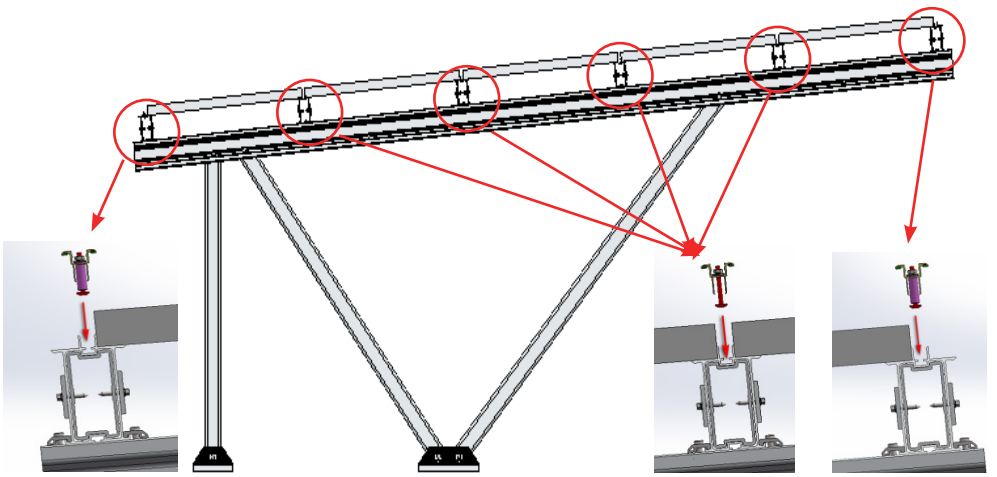

Fig. 16

Click the Dry Bar-Landscape or Dry Bar-Landscape (with Bushing) into the U slot of T-rail.
Make sure the T head bolt slide into the groove of T-rail as shown in Fig 17.

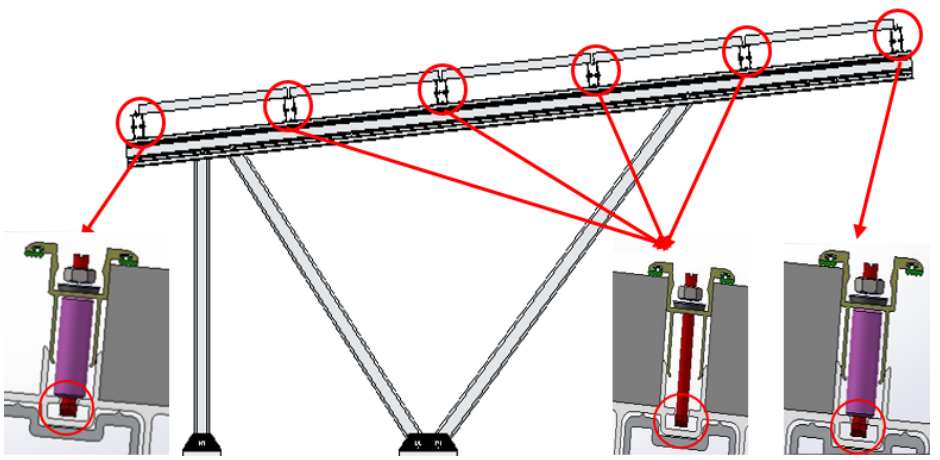

Fig. 17

1/10 Duerdin Street, Clayton VIC 3168 Australia
Tel: +61 3 9239 8088 Fax: +61 3 9239 8024
E-mail: sales@clenergy.com.au www.clenergy.com.au

Maintain 6mm gap between the PV Module and Dry Bar-Landscape/ Dry Bar-Landscape (with Bushing) as shown in Fig 18.

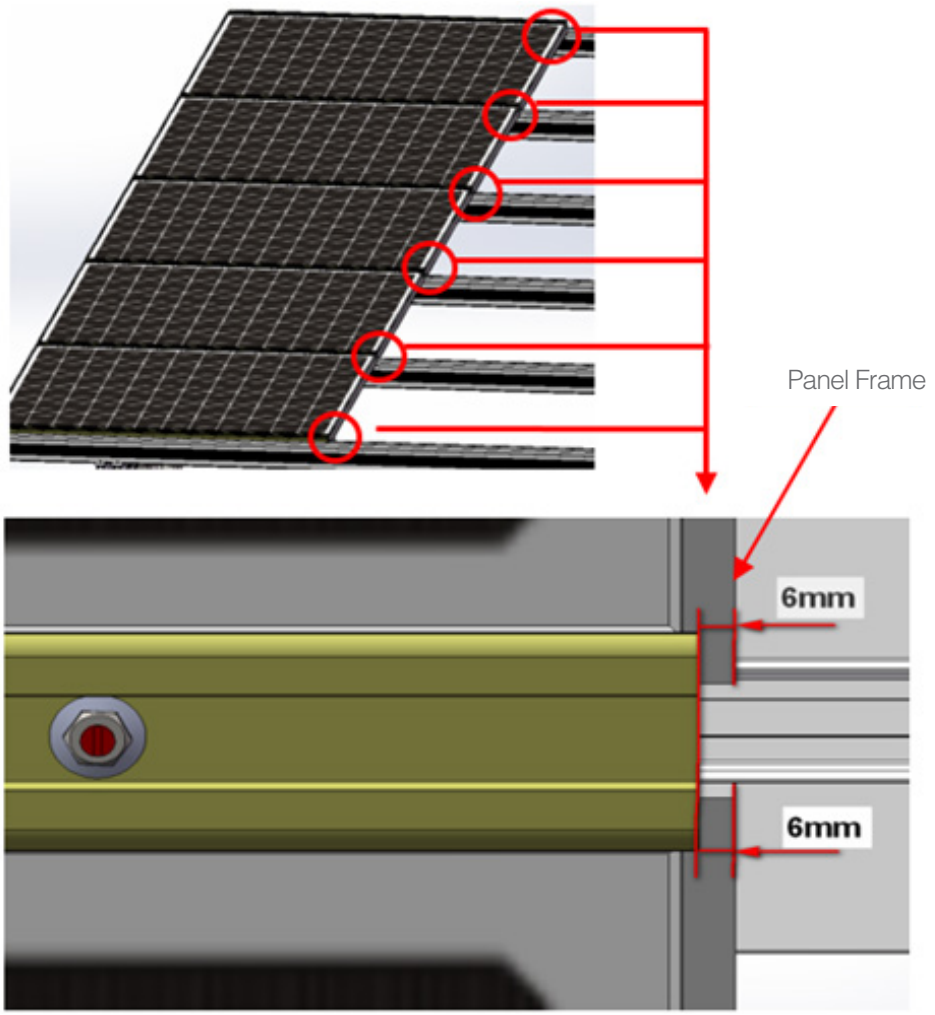

Fig. 18

Turn the T head bolt clockwise with Straight-slot Screwdriver until the T head bolt can't move anymore as shown in Fig 19.

Fasten M6 Nuts and T head bolts with Socket Spanner 10mm tightly.

Note: Please note that grease must be applied and tool speed must be controlled while fastening the bolts.

Recommended Torque:
M6 Bolts: 7~8 N·m

1/10 Duerdin Street, Clayton VIC 3168 Australia
Tel: +61 3 9239 8088 Fax: +61 3 9239 8024
E-mail: sales@clenergy.com.au www.clenergy.com.au

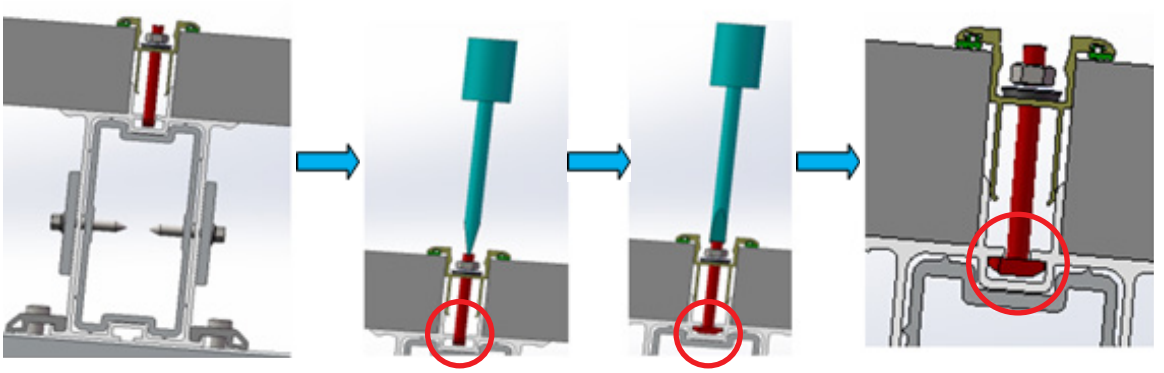

Fig. 19(the middle row)

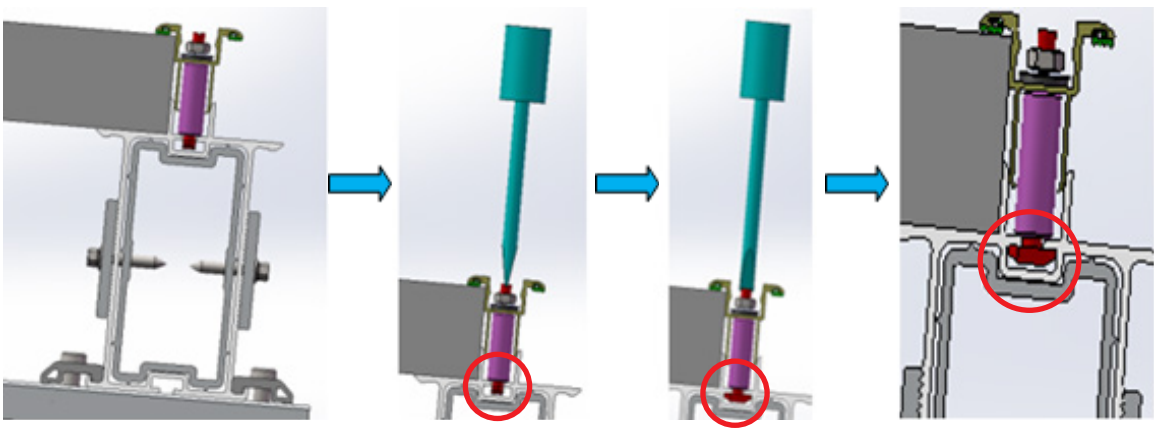

Fig. 19(the first and last row)

Repeat the above operations to install the second row of PV Modules as shown in Fig 20.

Note:
Maintain 20mm gap between the first row and the second row. And ensure the end faces of PV Modules are aligned.

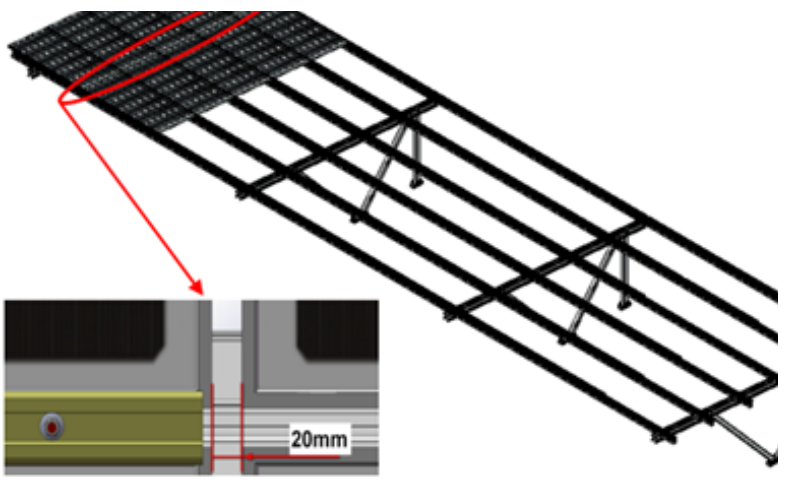

Fig. 20

1/10 Duerdin Street, Clayton VIC 3168 Australia
Tel: +61 3 9239 8088 Fax: +61 3 9239 8024
E-mail: sales@clenergy.com.au www.clenergy.com.au

Repeat the above operations to fix the Dry Bar-Landscape or Dry Bar-Landscape (with Bushing) as shown in Fig 21.

Note:
Maintain 6mm gap between the PV Module and Dry Bar-Landscape/ Dry Bar-Landscape (with Bushing).
Maintain 32mm gap between two Dry Bar-Landscape as shown in Fig 21.

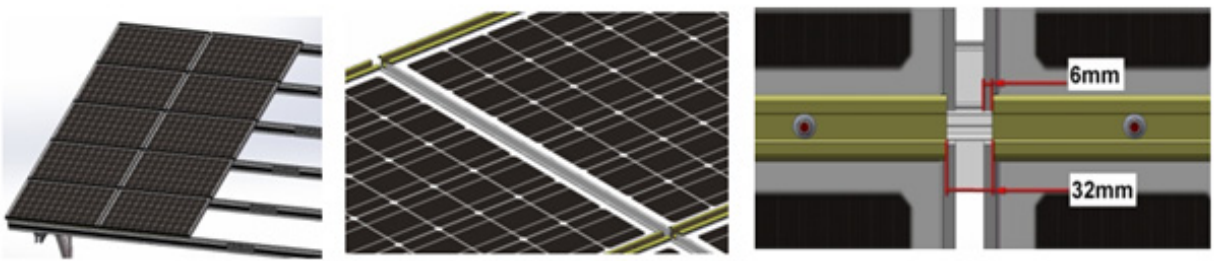

Fig. 21

5.2.5 Fix the Cross Connection for Dry Bar

Place the Cross Connection for Dry Bar between the two adjacent Dry Bar-Landscape as shown in Fig 22.

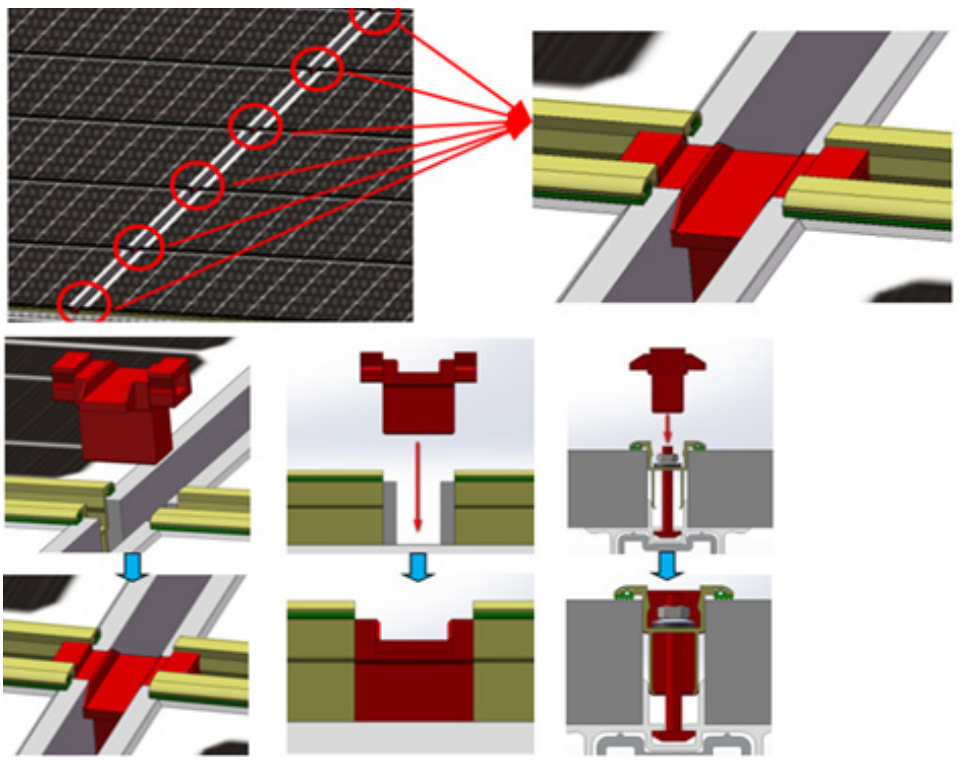

Fig. 22

1/10 Duerdin Street, Clayton VIC 3168 Australia
Tel: +61 3 9239 8088 Fax: +61 3 9239 8024
E-mail: sales@clenergy.com.au www.clenergy.com.au

5.2.6 Fix the Dry Bar-Portrait

Place the Dry Bar-Portrait between two adjacent rows of PV modules as shown in Fig 23.

Note:
Cut off the extra Rubber for Dry Bar by scissor.
Slide the T-bolt kit into groove of Dry Bar-Portrait, and turn the kit clockwise until it can't move anymore as shown in Fig 23.
Fasten M6 Nuts and T head bolts with Socket Spanner 10mm tightly as shown in Fig 23.

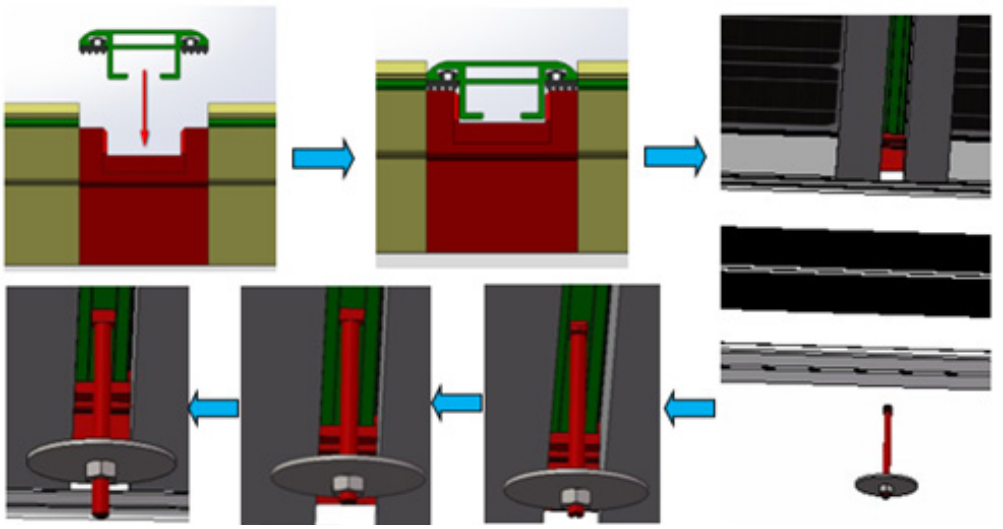

Fig. 23

Note: Please note that grease must be applied and tool speed must be controlled while fastening the bolts.

Apply 4 sets T bolt kit between Two PV Modules as shown in Fig 24.

Recommended torque:
M6 bolts is 5-6 N·m

Repeat the above steps until the whole array installation is completed as shown in Fig 25.

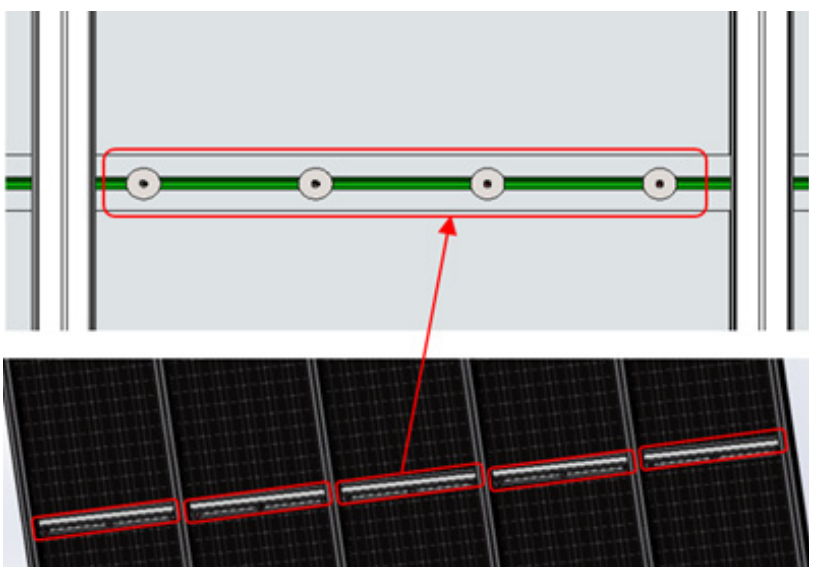

Fig. 24

1/10 Duerdin Street, Clayton VIC 3168 Australia
Tel: +61 3 9239 8088 Fax: +61 3 9239 8024
E-mail: sales@clenergy.com.au www.clenergy.com.au

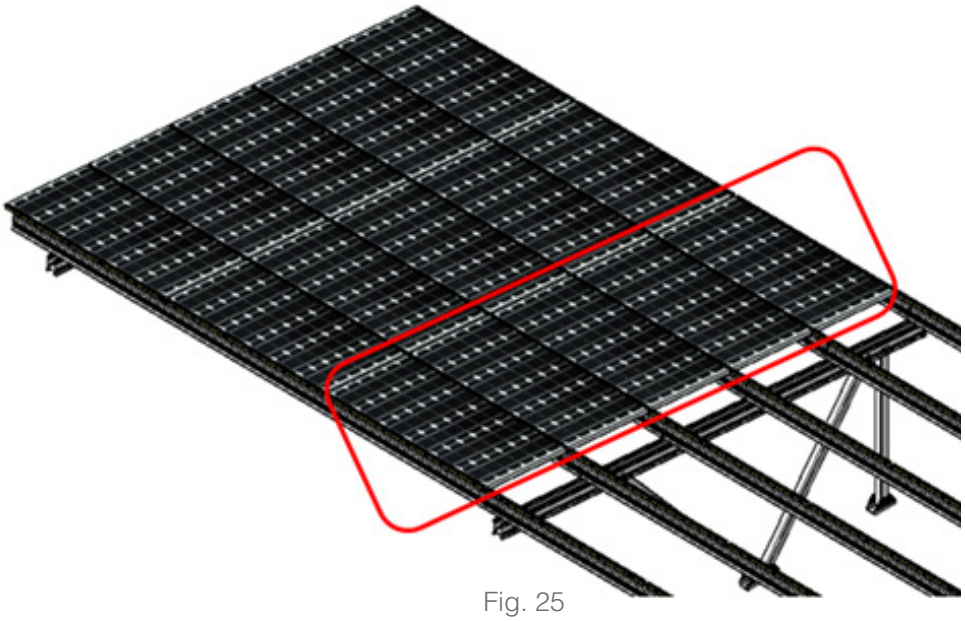

Fig. 25

5.2.7 Accessory Installation

Click the Top Cover for Landscape Dry Bar into the U slot of the Dry Bar-Landscape as shown in Fig 26.

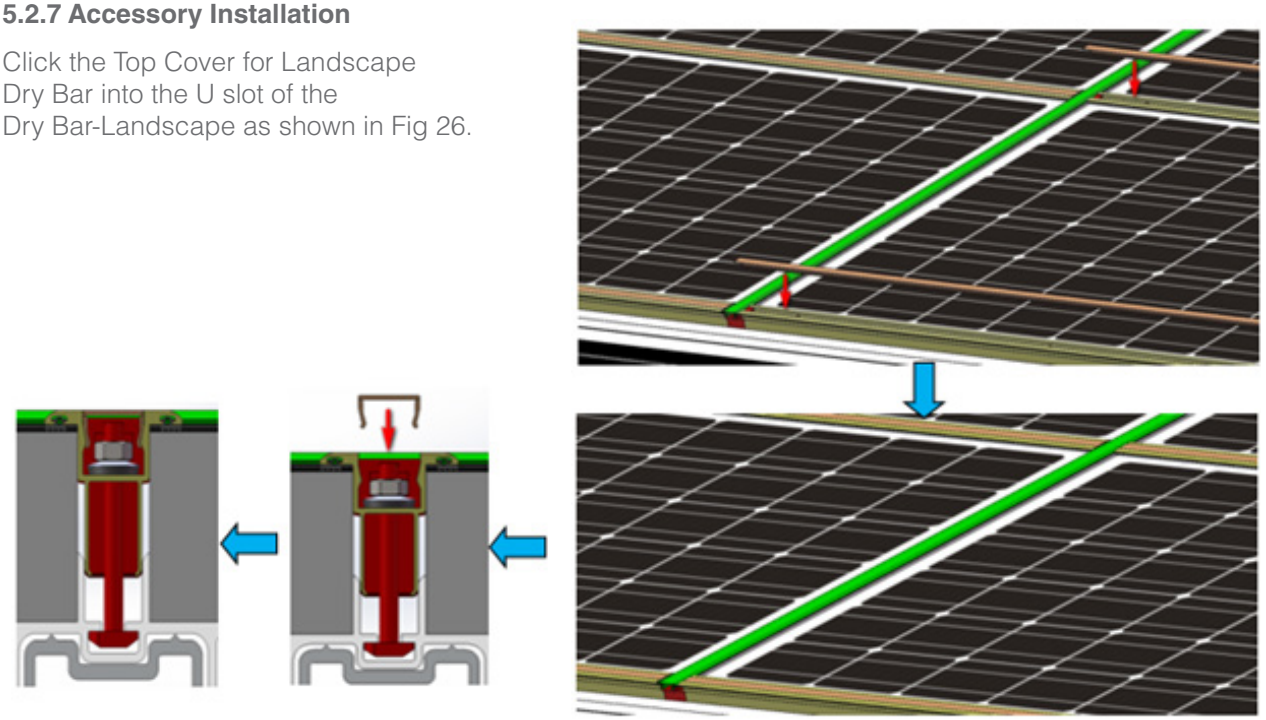

Fig. 26

1/10 Duerdin Street, Clayton VIC 3168 Australia
Tel: +61 3 9239 8088 Fax: +61 3 9239 8024
E-mail: sales@clenergy.com.au www.clenergy.com.au

Click the End Cap for Portrait Dry Bar into the groove of Dry Bar-Portrait as shown in Fig 27.

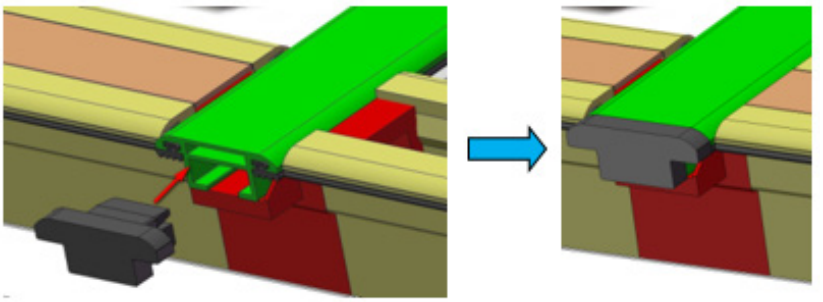

Fig. 27

5.2.8 Seal the space between the Dry Bar

Seal the space between the Dry Bar-Landscape and Dry Bar-Portrait with Weatherproof Neutral Silicone Sealant as shown in Fig 28.

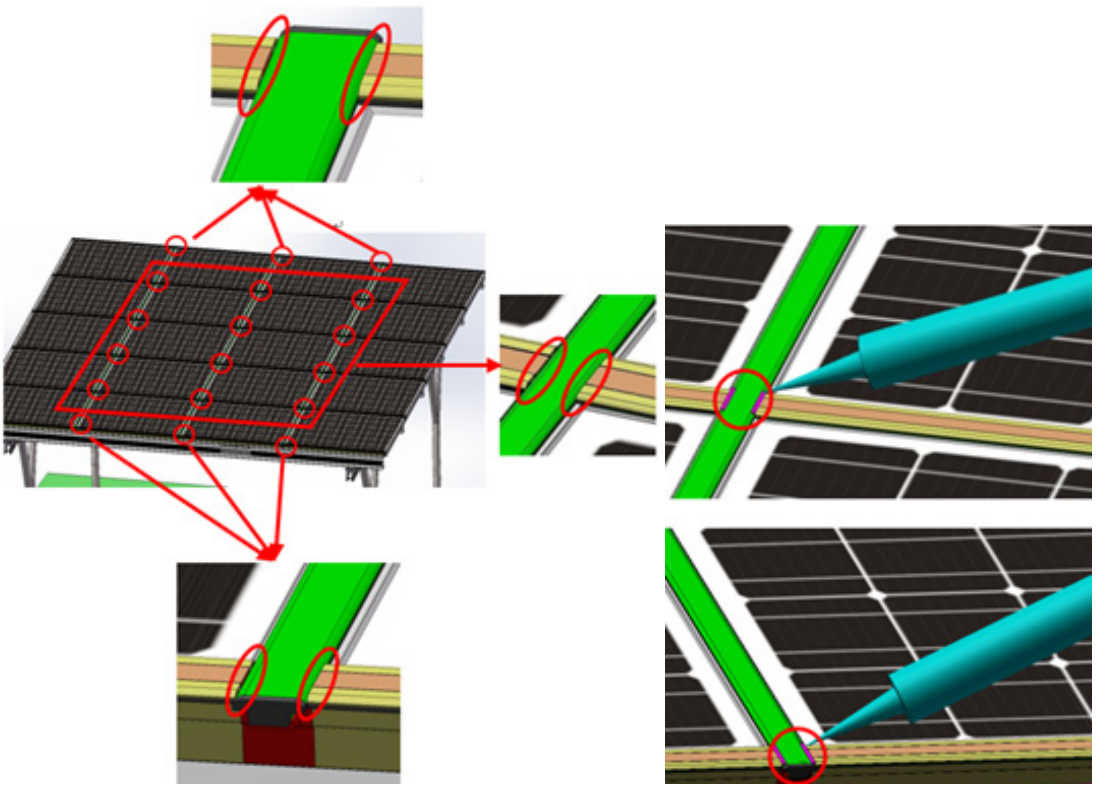

Fig. 28

1/10 Duerdin Street, Clayton VIC 3168 Australia
Tel: +61 3 9239 8088 Fax: +61 3 9239 8024
E-mail: sales@clenergy.com.au www.clenergy.com.au

Seal the space between the T-Rail and Dry Bar-landscape with weatherproof Neutral Silicone Sealant as shown in Fig 29.

Direction to be glued: Along the T-Rail.

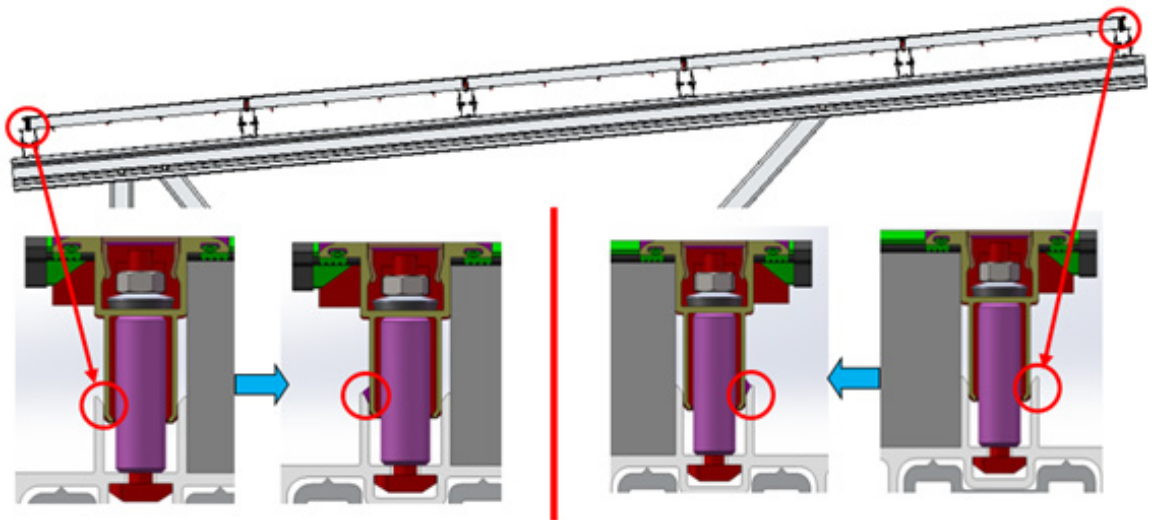

Fig. 29

Distance to be glued: From the left end face to the right end face of T-Rail 150 as shown in Fig 30.

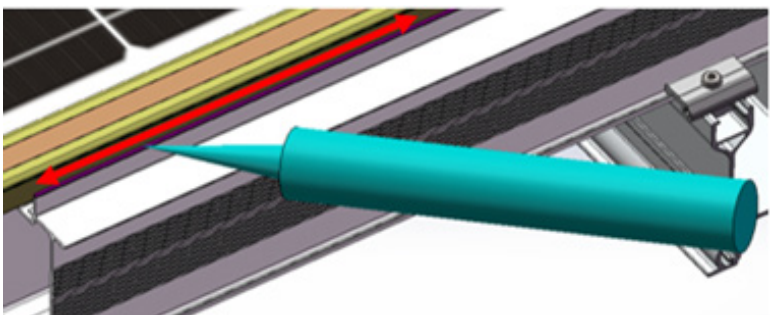

Fig. 30

Install End Cap into Dry Bar-landscape as shown in Fig 31.

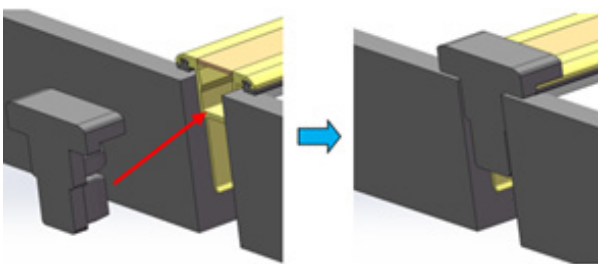

Fig. 31

1/10 Duerdin Street, Clayton VIC 3168 Australia
Tel: +61 3 9239 8088 Fax: +61 3 9239 8024
E-mail: sales@clenergy.com.au www.clenergy.com.au

5.3 PV Module Installation (without Dry Bars)

5.3.1 Same with step
5.3.2 Fix Module Clamp 40 to PV frame

After all PV Modules are placed properly, use the Module Clamp 40 to fix the back frame of PV Module on T-Rail, and fasten with 6mm Allen Key as shown on the Fig 32.

Note:
1. Apply 4 x Module Clamps 40 for each PV Module.
2. Please refer to the PV module installation instruction to confirm the clamping zones. It is recommended that the installation position of Module Clamp 40 from the PV module end to the clamps is 20% of module length (if not conflicted with the clamping zone of panels) as shown in Fig 33.
3. Recommended torque: M8 bolts is 18-20 N·m

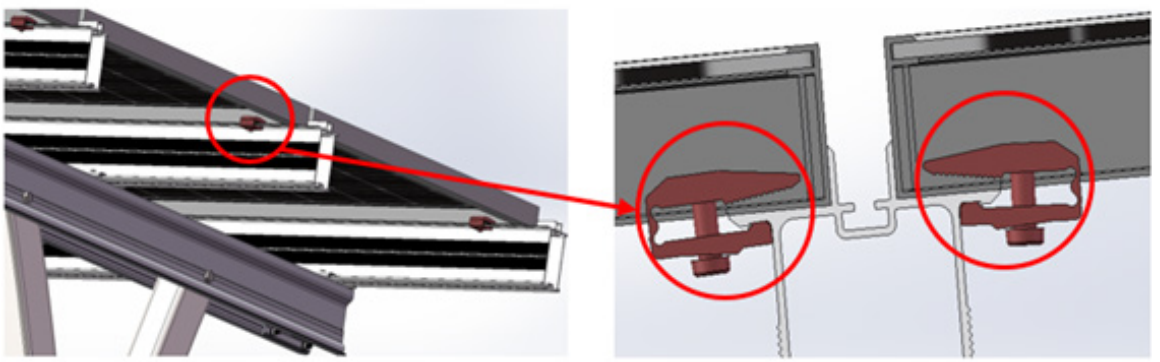

Fig. 32

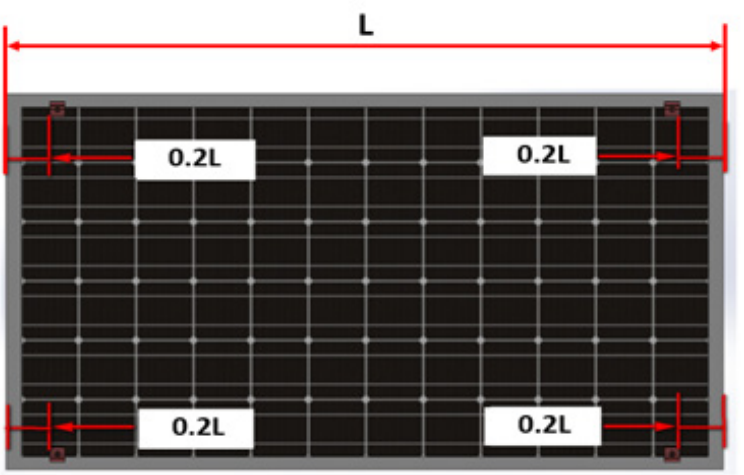

Fig. 33

1/10 Duerdin Street, Clayton VIC 3168 Australia
Tel: +61 3 9239 8088 Fax: +61 3 9239 8024
E-mail: sales@clenergy.com.au www.clenergy.com.au

5.3.3 Notes for Module Clamp 40 installation

Module Clamp 40 is only applicable for the panels whose underside frame width A is not less than 23mm and B is equal or less than 11mm (as shown in the figures below). Please consult the PV panel manufacturer to have this info. before the ezshade system order and installation.

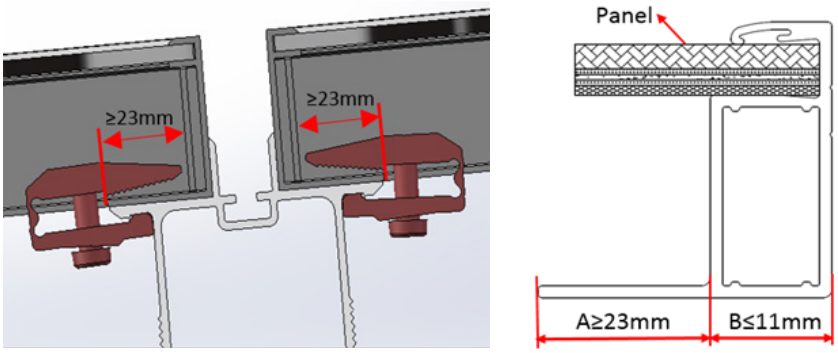

Fig. 34

5.4 How to Achieve Earthing for ezShade System

5.4.1 Module Clamp 40

When using ezShade without Dry-bar solution, Module Clamps 40 not only provide the fixing function for the panels, but also create earthing continuity between the PV panels and the T-Rail 150.

For ezShade with Dry-bar solution, Module Clamps 40 are also needed to create the earthing continuity between the PV panels and the T-Rail 150. It is recommended that 2 x Module Clamps 40 per panel are used (one for each long side of panel as shown in the Fig 35).

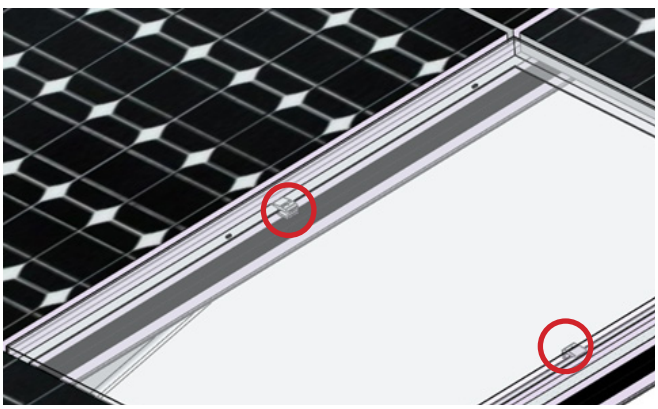

Fig. 35

1/10 Duerdin Street, Clayton VIC 3168 Australia
Tel: +61 3 9239 8088 Fax: +61 3 9239 8024
E-mail: sales@clenergy.com.au www.clenergy.com.au

5.4.2 Rail clamp with grounding pins and earthed z module (as shown in the figure below) is used for creating earthing continuity between the T-Rail 150 and the Main Support Beams.

Rail clamp with earthed z module is used for creating earthing path between the T-Rail 150 and the Main Support Beam. The red circles in below figure emphasize the pins on Rail clamp and Z-Module.

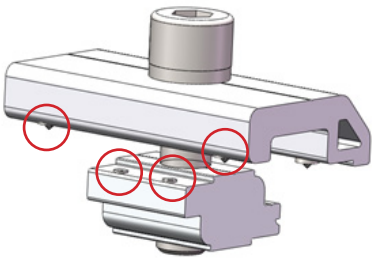

Fig.36

5.4.3 Set Screws

Set screws of M8 on the Main Support Beam are needed to be fastened (recommended torque: 4.5-5.5N·m) to achieve the grounding function from the Main Support Beams to the Rectangular Tubes (see the figure below).

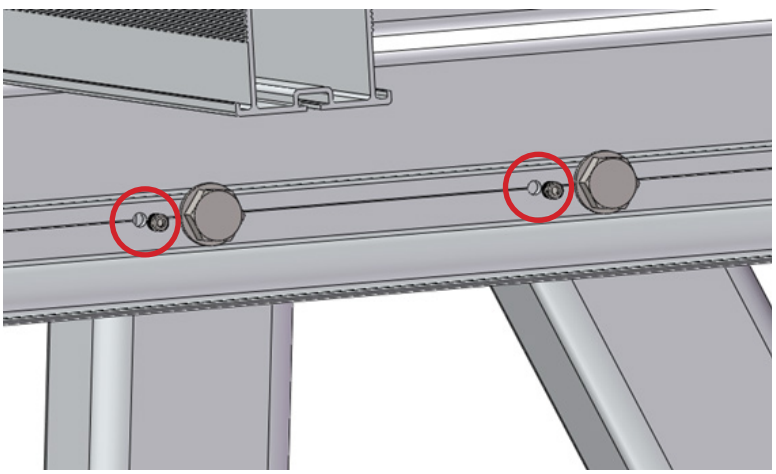

Fig.37

Now the ezshade system has achieved the earthing continuity from the PV panels to the support tubes. The installer is responsible for the earthing connection from the ezShade to the ground.

1/10 Duerdin Street, Clayton VIC 3168 Australia
Tel: +61 3 9239 8088 Fax: +61 3 9239 8024
E-mail: sales@clenergy.com.au www.clenergy.com.au

6. Warranty

10 year limited Product Warranty, 5 year limited Finish Warranty

Clenergy (Xiamen) Technology co. Ltd warrants to the original purchaser ("Purchaser") of product(s) that it manufactures ("Product") at the original installation site that the Product shall be free from defects in material and workmanship for a period of ten (10) years. The anodised finish shall be free from visible peeling, or cracking or chalking under normal atmospheric conditions for a period of five (5) years, from the earlier of 1) the date the installation of the Product is completed, or 2) 30 days after the purchase of the Product by the original Purchaser ("Finish Warranty").

The Finish Warranty does not apply to any foreign residue deposited on the finish. All installations in corrosive atmospheric conditions are excluded. The Finish Warranty is VOID if the practices specified by AAMA 609 & 610-02 – "Cleaning and Maintenance for Architecturally Finished Aluminum" (www.aamanet.org) are not followed by Purchaser. This Warranty does not cover damage to the Product that occurs during its shipment, storage, or installation.

This Warranty shall be VOID if installation of the Product is not performed in accordance with Clenergy's written installation instructions, or if the Product has been modified, repaired, or reworked in a manner not previously authorized by Clenergy IN WRITING, or if the Product is installed in an enviroN·ment for which it was not designed. Clenergy shall not be liable for consequential, contingent or incidental damages arising out of the use of the Product by Purchaser under any circumstances.

If within the specified Warranty periods the Product shall be reasonably proven to be defective, then Clenergy shall repair or replace the defective Product, or any part thereof, at Clenergy's sole discretion. Such repair or replacement shall completely satisfy and discharge all of Clenergy's liability with respect to this limited Warranty. Under no circumstances shall Clenergy be liable for special, indirect or consequential damages arising out of or related to use by Purchaser of the Product.

Manufacturers of related items, such as PV modules and flashings, may provide written warranties of their own. Clenergy's limited Warranty covers only its Product, and not any related items.

1/10 Duerdin Street, Clayton VIC 3168 Australia
Tel: +61 3 9239 8088 Fax: +61 3 9239 8024
E-mail: sales@clenergy.com.au www.clenergy.com.au

Certification Letter with Concrete Footing Options for ezShade

1/10 Duerdin Street, Clayton VIC 3168 Australia
Tel: +61 3 9239 8088 Fax: +61 3 9239 8024
E-mail: sales@clenergy.com.au www.clenergy.com.au

MW Engineering
Melbourne

CIVIL & STRUCTURAL ENGINEERS
RESIDENTIAL - INDUSTRIAL - COMMERCIAL - PRODUCT DEVELOPMENT

info@mwengineering.melbourne
Phone: 1300 MWENG-0 (1300 69364-0)
www.mwengineering.melbourne
ABN 37 605 815 585

2 December 2019

Clenergy Australia
1/10 Duerdin Street
Clayton, VIC 3168

CERTIFICATION LETTER

Clenergy PV-ezRack ezShade Certification – TC 2.5, 3 – Wind Region A, B and C. Internal REF: **00150.**

MW Engineering Melbourne, being Structural Engineers within the meaning of Australian regulations, have calculated the maximum spacings for the PV ez-Rack rail system for the following conditions:

- **Wind Loads to AS 1170.2-2011 AMDT 4-2016**
  - **Wind Terrain Category 2.5 and 3**
  - **Wind average recurrence of 200 years**
  - **Wind Region A, B and C**
- **Solar panel length up to 2108 mm for 72 cell panels**
- **Solar panel length up to 1700 mm for 60 cell panels**
- **Solar panel width up to 1050 mm for 72 cell panels and 60 cell panels**

Attached are the tables showing the spacings and footing configuration according to Wind Region and Terrain Category.

The values shown on these tables will be valid unless an amendment is issued on any of the following codes:

- **AS/NZS 1170.0- 2002 AMDT 4-2016**	**General Principles**
- **AS/NZS 1170.1- 2002 AMDT 4-2016**	**Imposed Loadings**
- **AS/NZS 1170.2- 2011 AMDT 4-2016**	**Wind Loadings**
- **AS/NZS 1664.1- 1997 AMDT 1:1999**	**Aluminium Code**
- **AS 4100- 1998**	**Steel Structures**
- **AS/NZS 1252.2-2016**	**Bolting**

Should you have any queries, do not hesitate to contact us.

Best Regards,

Alberto Escobar
Civil/Structural Engineer
BEng MIEAust NER
BRP EC 46542
RPEQ 18759
info@mwengineering.melbourne

CIVIL & STRUCTURAL ENGINEERS
RESIDENTIAL - INDUSTRIAL - COMMERCIAL - PRODUCT DEVELOPMENT
info@mwengineering.melbourne
Phone: 1300 MWENG-0 (1300 69364-0)
www.mwengineering.melbourne
ABN 37 605 815 585

STRUCTURAL DESIGN DOCUMENTATION

PV-ezRack ezShade Design Tables According to AS/NZS 1170.2:2011 Amdt 4-2016 Within Australia Terrain Category 2.5 and 3

Client : **Clenergy Australia**

REF: **CL-360-MW**

Date: **29/11/2019**

Copyright: The concepts and information contained in this document are the property of MW Engineering Melbourne. Use or copying of this document in whole or in part without the written permission of MW Engineering Melbourne constitutes an infringement in copyright.

Limitation: This report has been prepared for the exclusive use of Clenergy Australia, and is subject to and issued in connection with the provisions of the agreement between MW Engineering Melbourne and Clenergy Australia. MW Engineering Melbourne accepts no liability or responsibility whatsoever for any use of or reliance upon this report by any third party other than Clenergy's clients.

MW Engineering
Melbourne

CIVIL & STRUCTURAL ENGINEERS
RESIDENTIAL - INDUSTRIAL - COMMERCIAL - PRODUCT DEVELOPMENT
info@mwengineering.melbourne
Phone: 1300 MWENG-0 (1300 69364-0)
www.mwengineering.melbourne
ABN 37 605 815 585

Internal REF: **00254**

Client: **Clenergy Australia**

Project: **PV-ezRack ezShade Certificate**

Australian Standards

AS/NZS 1170.0:2002 (R2016)	**General Principles**
AS/NZS 1170.1:2002 (R2016)	**Imposed loadings**
AS/NZS 1170.2:2011 (R2016)	**Wind Loadings**
AS/NZS 1252.2:2016	**Bolting**
AS/NZS 1664.1:1997-Amdt	**Aluminium**

Wind Terrain Category **2.5 and 3**

Designed: **AE**

Date: **Nov-19**

Disclaimer: From the date of publication onwards, any amendment made to any of the above mentioned Standards will make this report outdated and a new one will have to be released, unless the amendment has no implications on this certificate.

MW Engineering
Melbourne

CIVIL & STRUCTURAL ENGINEERS
RESIDENTIAL - INDUSTRIAL - COMMERCIAL - PRODUCT DEVELOPMENT
info@mwengineering.melbourne
Phone: 1300 MWENG-0 (1300 69364-0)
www.mwengineering.melbourne
ABN 37 605 815 585

PV-ezRack ezShade Type: 5°, Single-Bay for 60-Cell Panels (15 panels)

		SLAB OPTION		FOOTING OPTION				
				Front Leg		Back Leg		
Wind Region	Terrain Category	Minimum Slab Thickness required (mm) (T)	Minimum Slab Reinforcement	Minimum depth for a 450mm diameter Pad (mm) (H)	Minimum depth for a 600mm diameter Pad (mm) (H)	Minimum depth for a 450mm diameter Pad (mm) (H)	Minimum depth for a 600mm diameter Pad (mm) (H)	Minimum Hold-down Bolt Rating (kN)
A	3	100	SL72 Top	600	400	400	400	2
A	2.5	100	SL72 Top	600	400	400	400	3
B	3	100	SL72 Top	600	400	400	400	7
B	2.5	100	SL72 Top	600	400	400	400	9
C	3	100	SL72 Top	600	500	400	400	14

* According to drawing PZ27-0-022-10 from Clenergy (Xiamen) Technology Co. ,Ltd.

PV-ezRack ezShade Type: 5°, Double-Bay for 60-Cell Panels (25 panels)

		SLAB OPTION		FOOTING OPTION				
				Front Leg		Back Leg		
Wind Region	Terrain Category	Minimum Slab Thickness required (mm) (T)	Minimum Slab Reinforcement	Minimum depth for a 450mm diameter Pad (mm) (H)	Minimum depth for a 600mm diameter Pad (mm) (H)	Minimum depth for a 450mm diameter Pad (mm) (H)	Minimum depth for a 600mm diameter Pad (mm) (H)	Minimum Hold-down Bolt Rating (kN)
A	3	150	SL92 Top	1000	400	400	400	3
A	2.5	150	SL92 Top	1000	400	400	400	5
B	3	150	SL92 Top	1000	500	400	400	12
B	2.5	150	SL92 Top	1000	500	400	400	14

* According to drawing PZ27-0-023-10 from Clenergy (Xiamen) Technology Co. ,Ltd.

MW Engineering
Melbourne

CIVIL & STRUCTURAL ENGINEERS
RESIDENTIAL - INDUSTRIAL - COMMERCIAL - PRODUCT DEVELOPMENT
info@mwengineering.melbourne
Phone: 1300 MWENG-0 (1300 69364-0)
www.mwengineering.melbourne
ABN 37 605 815 585

PV-ezRack ezShade Type: 5°, Single-Bay for 72-Cell Panels (15 panels)

		SLAB OPTION		FOOTING OPTION				
				Front Leg		Back Leg		
Wind Region	Terrain Category	Minimum Slab Thickness required (mm) (T)	Minimum Slab Reinforcement	Minimum depth for a 450mm diameter Pad (mm) (H)	Minimum depth for a 600mm diameter Pad (mm) (H)	Minimum depth for a 450mm diameter Pad (mm) (H)	Minimum depth for a 600mm diameter Pad (mm) (H)	Minimum Hold-down Bolt Rating (kN)
A	3	125	SL82 Top	600	400	400	400	2
A	2.5	125	SL82 Top	600	400	400	400	3
B	3	125	SL82 Top	600	400	400	400	9
B	2.5	125	SL82 Top	600	400	400	400	11

* According to drawing PZ27-0-024-10 from Clenergy (Xiamen) Technology Co. ,Ltd.

PV-ezRack ezShade Type: 5°, Double-Bay for 72-Cell Panels (20 panels)

		SLAB OPTION		FOOTING OPTION				
				Front Leg		Back Leg		
Wind Region	Terrain Category	Minimum Slab Thickness required (mm) (T)	Minimum Slab Reinforcement	Minimum depth for a 450mm diameter Pad (mm) (H)	Minimum depth for a 600mm diameter Pad (mm) (H)	Minimum depth for a 450mm diameter Pad (mm) (H)	Minimum depth for a 600mm diameter Pad (mm) (H)	Minimum Hold-down Bolt Rating (kN)
A	3	150	SL92 Top	1000	400	400	400	3
A	2.5	150	SL92 Top	1000	400	400	400	5
B	3	150	SL92 Top	1000	500	400	400	12
B	2.5	150	SL92 Top	1000	500	400	400	14

* According to drawing PZ27-0-025-10 from Clenergy (Xiamen) Technology Co. ,Ltd.

CIVIL & STRUCTURAL ENGINEERS
RESIDENTIAL - INDUSTRIAL - COMMERCIAL - PRODUCT DEVELOPMENT
info@mwengineering.melbourne
Phone: 1300 MWENG-0 (1300 69364-0)
www.mwengineering.melbourne
ABN 37 605 815 585

General Notes

Note 1 **Minimum Soil capacity for Slabs and Piers to be 100kPa. Installer must verify capacity or contact a Geotechnical Engineer for the assessment**

Note 2 **This Engineering Document was designed to cater for most common installation scenarios however, it does not cater for all of them. Contact Clenergy if you are unable to comply with any of the installation specifications listed on this document.**

Note 3

Component	Part No.	Description
T150 rail	ER-R-T150	T150 rail
T 150 rail splice	ER-SP-T150	T150 rail splice
Support	RT-100/90	Rectangular tube support
Beam	ER-B-150	Main support beam
Beam splice	SPIII-B150	Beam splice
U anchor plate	U-AP/TR/380	U anchor plate
U anchor plate	U-AP/TR/300	U anchor plate
Rail clamp	ER-RC-T	Rail clamp
Module clamp	EX-GC-MC40	Module clamp
Dry bar	ER-B-L	Dry bar-landscape

Note 4 **For Terrain Category (TC) definition, please refer to clause 4.2.1 of AS/NZS 1170.2:2011 (R2016).**

Note 5 **Maximum permitted rail overhang of 40% for the T150 rails.**

Note 6 **The tables in this certificate are for a single or double bay ezShade. For multiple bay installation, please contact Clenergy.**

Note 7 **From the date of publication onwards, any amendment made to any of the above mentioned Standards will make this report outdated and a new one will have to be released, unless the amendment has no implications on this certificate.**

Note 8 **All components from Clenergy must be installed according to manufacturer's specification and the instructions shown in the relevant installation manual. Please check the Clenergy Australia website or contact them for access to the most recent installation manuals.**

Note 9 **No consideration has been taken on the effect of snow loads. In case the roof is located in a snow prone area, a special design must be made.**

Note 10 **Minimum spacing between supporting frames to be 3500mm.**

MW Engineering
Melbourne

CIVIL & STRUCTURAL ENGINEERS
RESIDENTIAL - INDUSTRIAL - COMMERCIAL - PRODUCT DEVELOPMENT
info@mwengineering.melbourne
Phone: 1300 MWENG-0 (1300 69364-0)
www.mwengineering.melbourne
ABN 37 605 815 585

General Notes (Continued)

Note 11 **Minimum Soil capacity for Slabs and Pads to be 100kPa. Installer must verify capacity or contact a Geotechnical Engineer for the assessment**

Note 12 **Frames must be protected against impact loadings according to AS 1170.1, by using bollards or any other protective system**

Note 13 **If the footing is raised the elevation above ground for individual pier footings must not exceed 400 mm (h in figure 3). Refer to Clenergy for reinforcement details.**

Note 14 **Maximum hole size for cable management on girder/rail to be 40mm. To be located at the third of the girder/rail span between support points as per image below**

Note 15 **If significant Sway displacement is noticed after the installation. Contact Clenergy to verify that the installation procedure has been followed correctly**

Note 16 **This structure was not designed for Earthquake considerations. If installing this in a seismic-prone area, please contact Clenergy for further provisions on bracing installation**

Note 17 **Concrete footings/slab must have a minimum capacity of 25MPa**

Note 18 **Reinforcement for the footings/slab (if required, figures 1 and 3) must have a minimum yield strength of 420MPa**

Note 19 **Maximum spacing for saw cuts in new slabs to be 5000mm on both directions**

Note 20 **Ratings for the hold-down bolts are for a single bolt. Consult manufacturer for bolt capacitites.**

Note 21 **Maximum spacing between two legs as per the below table:**

PV-ezRack ezShade Type: 5°, Single-Bay for 60-Cell Panels (15 panels)	PV-ezRack ezShade Type: 5°, Double-Bay for 60-Cell Panels (25 panels)	PV-ezRack ezShade Type: 5°, Single-Bay for 72-Cell Panels (15 panels)	PV-ezRack ezShade Type: 5°, Double-Bay for 72-Cell Panels (20 panels)
3500 mm	6000 mm	4200 mm	6000 mm

MW Engineering
Melbourne

CIVIL & STRUCTURAL ENGINEERS
RESIDENTIAL - INDUSTRIAL - COMMERCIAL - PRODUCT DEVELOPMENT
info@mwengineering.melbourne
Phone: 1300 MWENG-0 (1300 69364-0)
www.mwengineering.melbourne
ABN 37 605 815 585

Note 22 **The length (L) and Width (W) of the concrete slab to be as per the below table. Refer to concrete relevant standards to specify the minimum expansion joints needed in the slab.**

PV-ezRack ezShade Type: 5°, Single-Bay for 60-Cell Panels (15 panels)		PV-ezRack ezShade Type: 5°, Double-Bay for 60-Cell Panels (25 panels)		PV-ezRack ezShade Type: 5°, Single-Bay for 72-Cell Panels (15 panels)		PV-ezRack ezShade Type: 5°, Double-Bay for 72-Cell Panels (20 panels)	
L (mm)	W (mm)	L (mm)	W (mm)	L (mm)	W (mm)	L (mm)	W (mm)
5200	5592	8700	5592	6400	5592	8700	5592

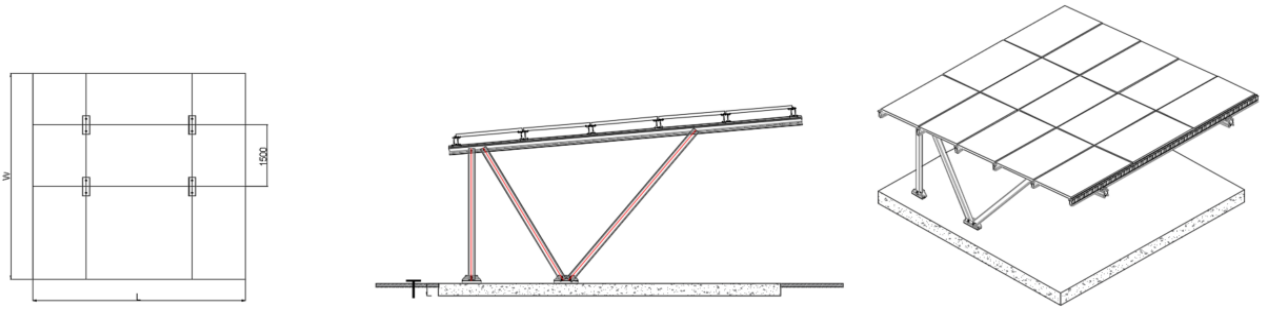

Figure 1. Slab foundation

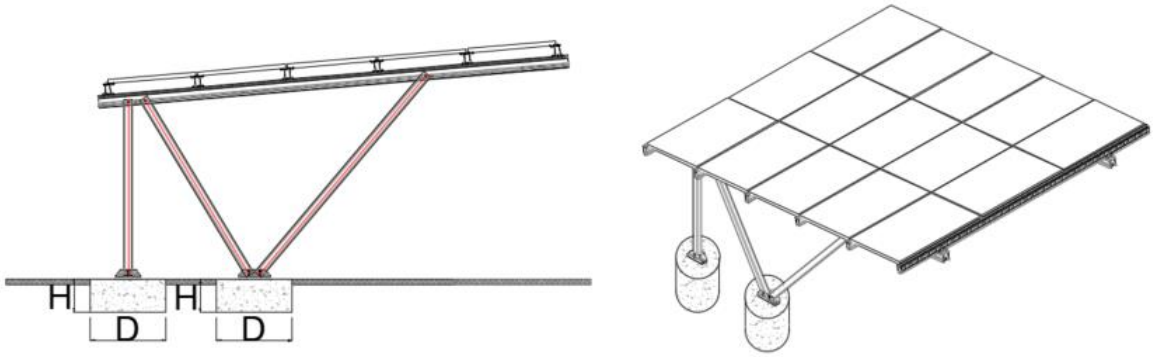

Figure 2. Individual pier foundation

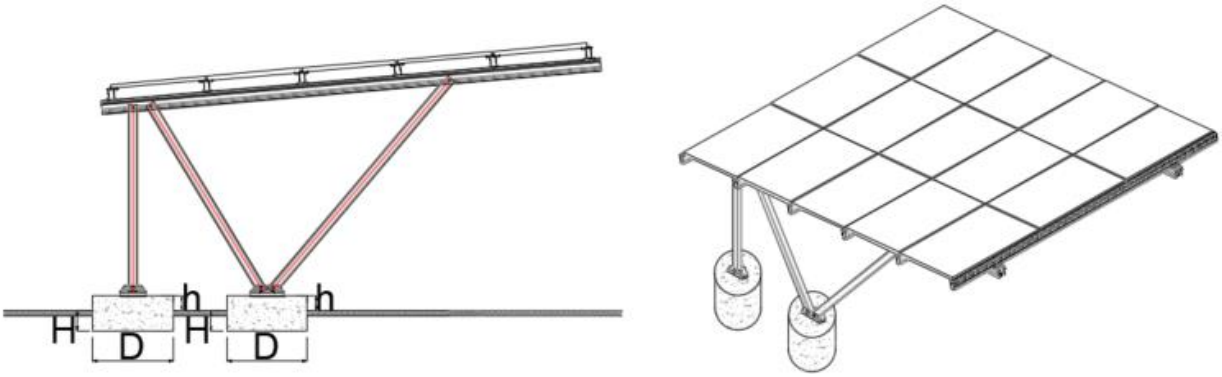

Figure 3. Elevated above ground individual pier foundation

Worldwide Network

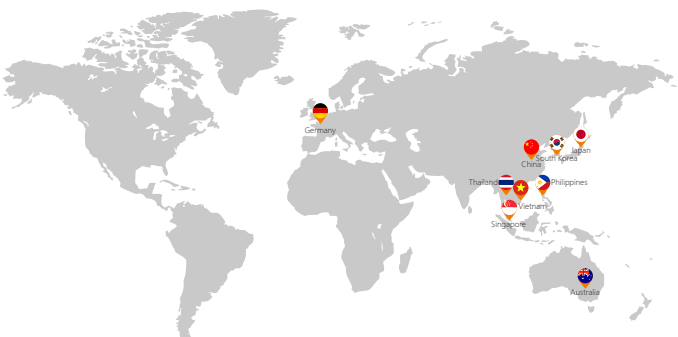

10 Year Warranty*

Clenergy Australia
1/10 Duerdin Street, Clayton VIC 3168 Australia
Tel: +61 3 9239 8088 Fax: +61 3 9239 8024
E-mail: sales@clenergy.com.au www.clenergy.com.au

Clenergy China
999-1009 Min'an Rd, Huoju Hi-tech Ind. Dev. Zone
Xiang'an District 361101, Xiamen, Fujian, China
Tel: +86 592 311 0088 Fax: +86 592 599 5028
E-mail: sales@clenergy.com.cn www.clenergy.com.cn

Clenergy EMEA
Esplanade 41, 20354 Hamburg, Germany
Tel: +49 (0) 40 3562 389 00
E-mail: sales.emea@clenergy.com

Clenergy Japan
Nittochi Yamashita Building 5th Floor
23 Yamashita-cho, Yokohama, 231-0023 Japan
Tel: +81 45 228 8226 Fax: +81 45 228 8316
E-mail: sales@clenergy.co.jp www.clenergy.jp

Clenergy Philippines
145 Yakal St., San Antonio village, Makati City, Philippines
Tel: +63 977 8407240
E-mail: sales_ph@clenergy.com www.clenergy.ph

Clenergy Thailand
9/2, 5th Floor, Vorasin Building, Soi Yasoob 2, Viphavadee-Rungsit Road, Chomphon Sub-district, Chatuchak District, Bangkok 10900
Tel: +66 (0) 2 277 5201, +66 (0) 6 3228-0200
E-mail: sales_th@clenergy.com,support_th@clenergy.com

Clenergy Singapore
24 Raffles Place #28-01 Clifford Centre Singapore 048621
Tel: +65 9743 1425
E-mail: vincent.chan@clenergy.com

Clenergy Vietnam
Tel: +86 592 3110095
E-mail: sales_vietnam@clenergy.com;
susie.chen@clenergy.com;
ducnguyen@clenergy.com