Energy Meter with Modbus Connection

SE-MTR-3Y-400V-A

ACCESSORIES

5 YEAR WARRANTY

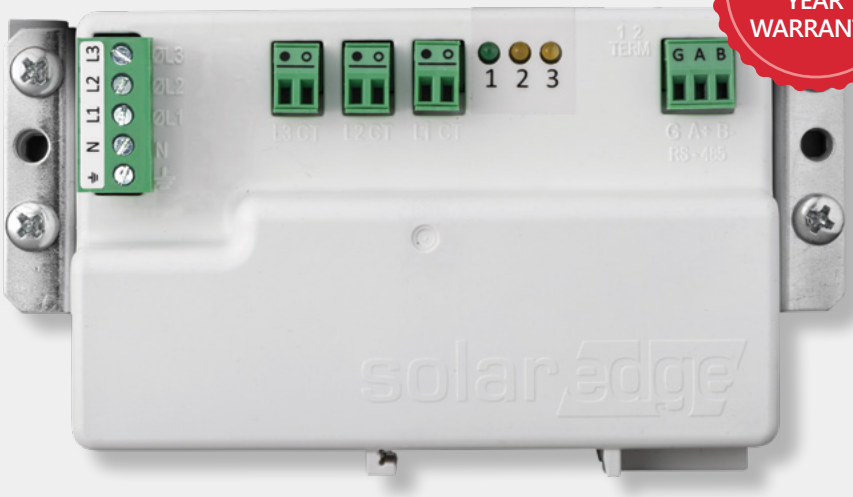

Energy Meter with Modbus Connection for SolarEdge Installations

- High accuracy meter readings for production/consumption monitoring
- Import/Export meter readings for export limitation functionality
- Small and easy to install - fits in standard electrical panels
- Supports residential, commercial and utility-size installations
- Supports RS485 120Ω line termination

/ Energy Meter with Modbus Connection

SE-MTR-3Y-400V-A

WHEN ORDERING A METER, ORDER CURRENT TRANSFORMERS AS WELL:

CURRENT TRANSFORMER MODEL(1)	RATED RMS CURRENT(A)	INTERNAL (A X B) / EXTERNAL (C X D)
SE-CTML-0350-070	70	10 x 10 / 25.4 x 39
SE-ACT-0750-50	50	20 x 20 mm / 61 x 60.4 mm
SE-ACT-0750-100	100	
SE-ACT-0750-250	250	
SE-CTS-2000-1000	1000	50.8 x 50.8 mm / 121 x 127 mm
SE-CTB-4x4-3000	3000	102 x 102 mm / 158 x 168 mm
SE-CTB-4x4-2000	2000	102 x 102 mm / 158 x 168 mm
SE-CTB-4x4.5-1200	1200	102 x 114 mm / 171 x 168 mm

(1) One current transformer per phase; for other ratings contact SolarEdge

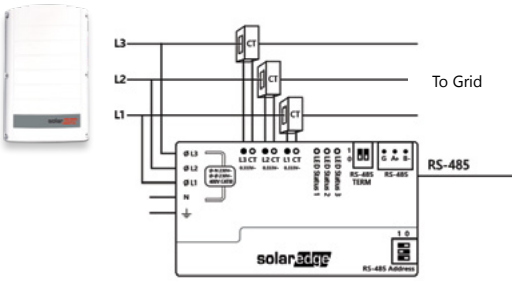

Current Transformer Dimensions

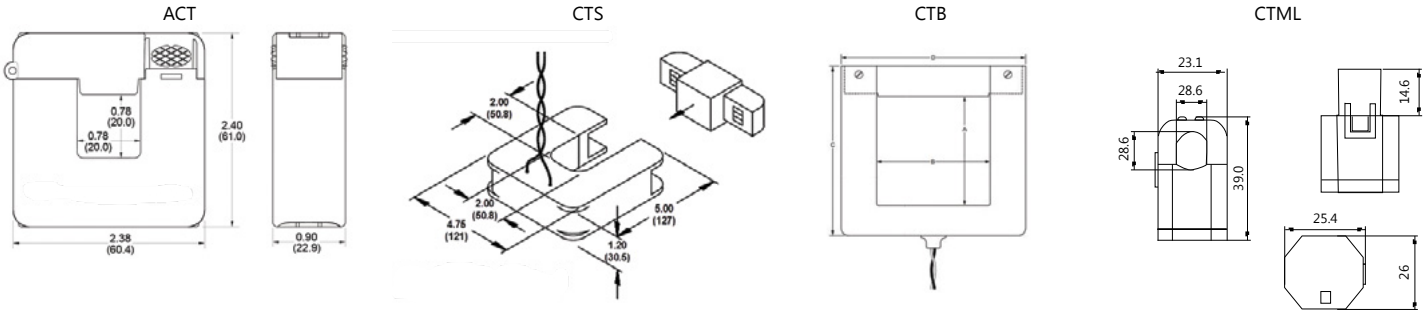

		SE-MTR-3Y-400V-A	UNITS
ELECTRICAL SERVICE			
Operating Voltage Range	Line to Line	207 - 440	Vac
	Line to Neutral	108 - 305	Vac
Nominal Voltage Range	Line to Line	230 - 400	Vac
	Line to Neutral	120 to 277	Vac
AC Frequency		45 - 65	Hz
Grids Supported(2) - Single Phase ; Three Phase		L / N / PE ; L1 / L 2 / L3 / N / PE	
Power Consumption (max)		3	W
CT Inputs		333	mV
COMMUNICATION			
Supported Communication Interfaces		RS485 half-duplex, 3 wires (A, B, GND)	
Response Time(3)		≤200	ms
Default Device ID (Modbus)		2	
RS485 Line Termination		120	Ω
ACCURACY (@25°C, PF: 1)(4)			
1% - 100% of Rated CT Current		±1.0	%
IEC Accuracy		IEC 62053-21 Class 1, IEC 62053-23 Class 2	
STANDARD COMPLIANCE			
Safety		IEC 61010-1, UL 61010-1, CAN/CSA-C22.2 No. 61010-1-04	
Immunity		EN 61326: 2000, EN 61000-4-2, EN 61000-4-3, EN 61000-4-4, EN 61000-4-5, EN 61000-4-6, EN 61000-4-5, EN 61000-4-6,	
Emissions		EN 55022 Class B	
INSTALLATION SPECIFICATIONS			
Dimensions (HxWxD)		75 x 138.6 x 35 / 2.95 x 5.45 x 1.37	mm / in
Weight		225 / 0.49	gr / lb
Operating Temperature Range		-40 to +85 / -40 to +185	°C / °F
Relative Humidity (non-condensing)		5% to 90% up to 40°C decreasing linearity to 50% RH at 55°C	
Protection Rating		IP20 - Suitable for indoor use	
Mounting Type		DIN Rail / Surface mount	

(2) PE (Protective Earth) connection is not required for meter operation
(3) For power limitation application. When meter is connected at grid connection point, and when RS485 is used for multiple inverters
(4) Using SE-ACTL-0750 CT model
±1.5% from 10% to 100% of rated current for CTB CTs
±1.25% from 1% to 130% of rated current for CTML CTs

© SolarEdge Technologies Ltd. All rights reserved. SOLAREDGE, the SolarEdge logo, OPTIMIZED BY SOLAREDGE are trademarks or registered trademarks of SolarEdge Technologies, Inc. All other trademarks mentioned herein are trademarks of their respective owners. Date: 06/2020/V01/ENG. Subject to change without notice.

CE RoHS

solaredge